REP	REFERENCE	DESIGNATION	QTY	REV	MATERIAL	SUPPLIER	MASS (Kg)
706-002	318711-JLA-706-002	Link	1	A	Ti-6Al-4V		1.12
706-003	318711-JLA-706-003	Clevis	1	A	Nitronic 50		1.87
706-004	318711-JLA-706-004	PIN	1	A	Ti-6Al-4V		0.13
706-005	318711-JLA-706-005	axle	1	A	Nitronic 50		1.54
706-006	318711-JLA-706-006	flange adjustment	1	A	304L (X2CrNi18-9)		4.13
706-007	318711-JLA-706-007	lug	1	A	304L (X2CrNi18-9)		0.04
706-008	318711-JLA-706-008	special spherical nut	1	A	Ti-6Al-4V		0.32
706-009	318711-JLA-706-009	suspension end	1	A	304L (X2CrNi18-9)		3.66
706-010	318711-JLA-706-010	Braids	1	A	Cuivre/Copper		0.26
706-011	318711-JLA-706-011	braid clamp	2	A	304L (X2CrNi18-9)		0.08
706-012	318711-JLA-706-012	Bellow attachment point	1	A	304L (X2CrNi18-9)		0.02
706-013	318711-JLA-706-013	Key	1	A	Nitronic 50		0.03
706-014	318711-JLA-706-014	Suspension bellow	1	A	304L (X2CrNi18-9)		0.10
706-015	318711-JLA-706-015	pin / radiation screen	1	A	304L (X2CrNi18-9)		0.02
706-016	318711-JLA-706-016	PIN	1	A	Ti-6Al-4V		0.16
9015	Circlips pour arbre 8X0.8		2				
9016	Circlips pour arbre 25X1.2		4				
9017	VIS 304L CHc M 6 X 10	NVI9000	2		STAINLESS STEEL		5.41
9018	VIS 304L CHc M 6 X 50	NVI9000	4		STAINLESS STEEL		14.30
9019	VIS 304L CHc M 6 X 25	NVI9000	1		STAINLESS STEEL		8.75
9020	Rondelle Ø 6 M inox304L	NVIRP0018	11		Matériau <non spécifié>		0.15
9021	Rondelle Ø 16 M inox304L	NVIRP0028	4		Matériau <non spécifié>		1.81
9022	Ecrou H M 16 Inox 304L	NVIEC0022	4		Inox/Stainless steel 304L		35.26
9023	Ecrou H M 6 Inox 304L	NVIEC0009	4		Inox/Stainless steel 304L		2.43
9024	Vis 304L HM 16 X 90	NVI9000	4		Inox/Stainless steel 304L		180.68
9025	12x60	Tapped pin/goupille taraudé	2		steel/Acier		0.01
9045	PVD013006070XD	Spring washer	2		Cuivre/Copper		0.00
9026	PVD013006070XD	Spring washer	16		Cuivre/Copper		0.00
9046	318711-SENSOR CEA-06-125UT-350	CEA-06-125UT-350	1		copper OFHC	MICRO MEASUREMENT	0.00
9028	LEMO 8 PIN CONNECTOR	EEN.2F.308.XLM	1		Matériau <non spécifié>	LEMO	0.00

REVISIONS				
ZONE	REV.	DESCRIPTION	DATE	APPROUVE
	A	CREATION	08/07/2013	M. DELBECQ

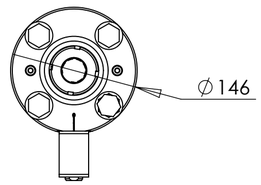

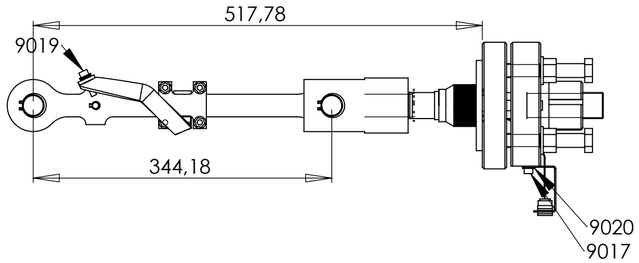

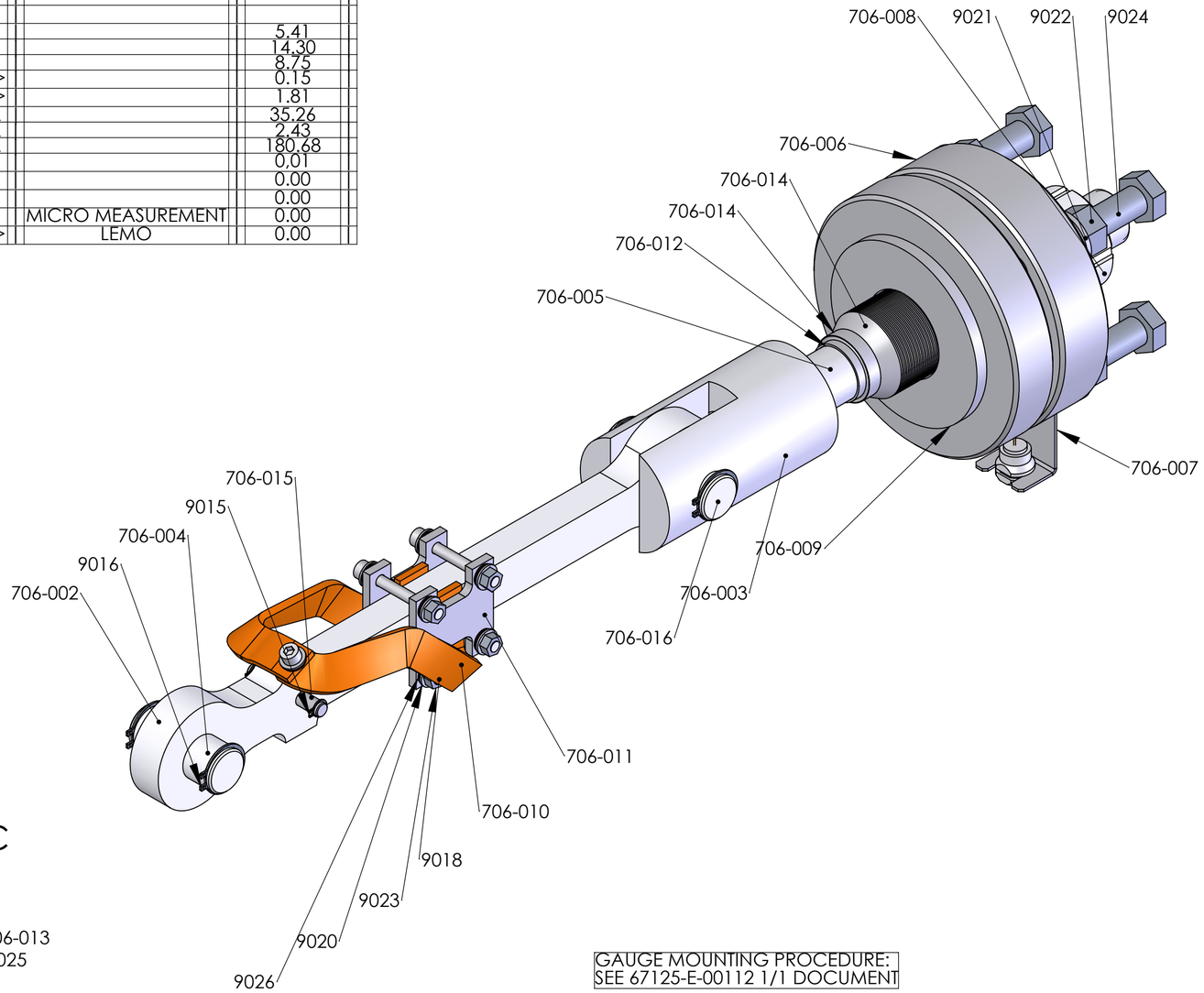

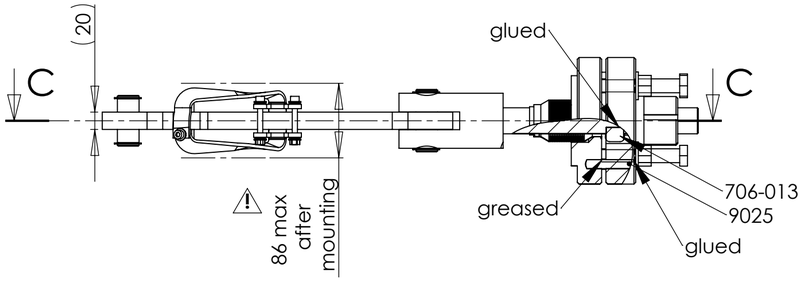

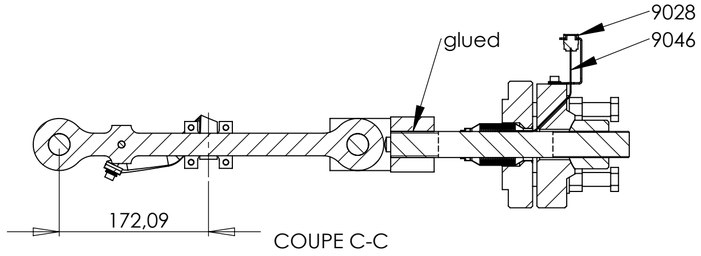

GAUGE MOUNTING PROCEDURE:
SEE 67125-E-00112 1/1 DOCUMENT

SIGMAPHI
ZI du prat
Rue des frères Mongolfier
F-56000 Vannes

Tel(33) 02.97.01.08.80 Fax (33)02.97.01.08.81 EMAIL Contact@sigmaphi.fr

	Name	Date
Drawing	M. DELBECQ	24/09/2013
Checked		
Approved		
MATERIAL:	See assembly	
Trait.:		
Roughness :		
Tol Gen		
Supplier:		
Weight:	14.64 Kg	
	0.00	
	File name:318711-JLA-706-001	

QPOLE

SUSPENSION

DWG NO. **318711-JLA-706-001**

Rev: **A**

This drawing may not be used without special licence or authorisation express (Law of the 11 march 1957)

A2 SCALE:1:5 SHEET 1 OF 1