HES DIPOLE MAGNET POWER SUPPLY 250V / 1100A

U S E R ' S G U I D E

CONTENTS

1.	Outline	.....P.1
2.	Specification	.....P.1
3.	Transportation and installation	.....P.1
4.	Connection of cables	.....P.1-3
5.	Connection of cooling water	.....P.3
6.	Polarity switching	.....P.4
7.	ID number	.....P.4
8.	Enabling "Correction signal" from NMR	.....P.5
9.	Control panel	.....P.6-9
10.	Operation procedure	.....P.10
11.	Interlock	.....P.11
12.	Maintenance check	.....P.12-15

HES DIPOLE MAGNET POWER SUPPLY
SPECIFICATION SHEET

1. General

This specification defines the performance characteristics of HES DIPOLE MAGNET POWER SUPPLY (hereinafter called "the supply") delivered to Thomas Jefferson National Accelerator Facility via Tohoku University.

2. Specification

2-1 Performance

(1) Rated output current and voltage

Output current	: 1100A max
Output voltage	: 250V max

(2) Running pattern

Duty	: The supply can continuously output 100% of the rated current.
Setting range of current	: 10% - 100% of the rated current
Ringing	: $\leq$ 1%
Rise time	: About 60 seconds in high-speed mode.

(3) Current stability : 1.0×10^{-5} / 8h (Absolute value: at 10-100% of the rated current)

(4) Ripple and noise : 1.0×10^{-5} (Absolute value of current ripple that reduced from voltage ripple: at rated output)

(5) Setting resolution : About 5×10^{-5}

(6) Repeatability : About 1.0×10^{-5} (When current is set with digital signal)

(7) Feature

Type	: Constant current DC power supply
Components	: Thyristor preregulator and transistor dropper

(8) Cooling : Water cooling

2-2 Function

2-2-1 Control panel

(1) Control panel on this supply can switch an operation mode (REMOTE/ LOCAL). In the l ocal operation mode, the panel allows a user to control the supply even if there is no signal from a remote site.

Operating switches are as follows:

a. CONTROL breaker

b. LOCAL/ REMOTE SWITCH

[Button color: White, LED color: Yellow]

When the two switches are pushed simultaneously, operation mode is REMOTE.

c. EXCITATION OFF/ ON SWITCH

[Button color: Red (ON) Green (OFF), LED color: Red (ON) Green (OFF)]

"EXCITATION OFF SWITCH" is enabled regardless of an operation mode.

The LED of EXCITATION OFF SWITCH lights green when the supply is ready and the operation mode is LOCAL. In other cases, the LED is turned off.

d. LAMP TEST SWITCH

[Button color: White, No LED]

e. RESET SWITCH

[Button color: Yellow, No LED]

This switch is enabled only in the LOCAL operation mode.

f. CURRENT SET SWITCH

A 5-digit rotary switch that can set current by 0.1A

g. SET SWITCH

[Button color: White, No LED]

A switch to increase or decrease output current to a value set by CURENT SET SWITCH

h. ZERO SET SWITCH

[Button color: White, No LED]

A switch to decrease output current to 0A

j. REM/ LOC DISPLAY SWITCH

[Button color: White (REM and LOC), LED color: Yellow (REM and LOC)]

A switch to have the CURR REF indicator display the set value of REMOTE or LOCAL.

k. EMERGENCY STOP SWITCH

[Button color: Red, No LED]

l. POLARITY INDICATORS (+ and -)

[LED color: Green (+ and -)]

Indicators of the output polarity

m. NMR CONTROL STATE INDICATOR

[LED color: Green]

Turned on when "correction signal" from NMR is enabled. Use a switch inside of the supply to enable the signal.

b, c, and j are illuminated push button switches. Adjunct LEDs show the selected state.

(2). Supplement

- On start-up, operation mode is REMOTE.
- Switch location

Switch	Position
EXCITATION ON	RIGHT
EXCITATION OFF	LEFT
REMOTE	RIGHT
LOCAL	LEFT

- Excitation state is turned off with the change of operation mode when EXCITATION ON SWITCH is lighting.

2-2-2 Remote control interface

Two types of remote control interface are available. One method is to communicate with a remot e computer through RS-232C. Another is a hard-wired interface.

(1) RS232C control signal (RECEIVE at the supply)

(A). Control informations in command from PC

a. Excitaion ON
b. Excitaion OFF
c. Set current
d. Reset interlock
e. Specify command type
f. Monitor status

(B). Command format

a. Control comand

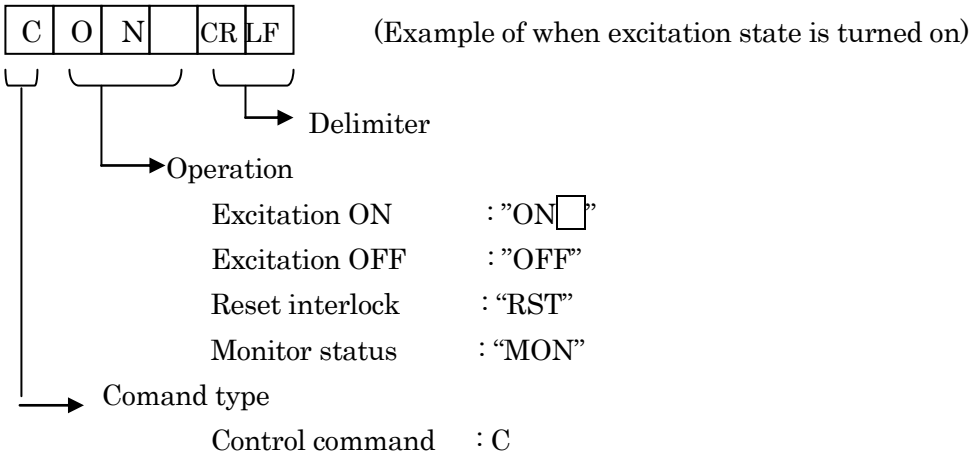

a. Setting comand

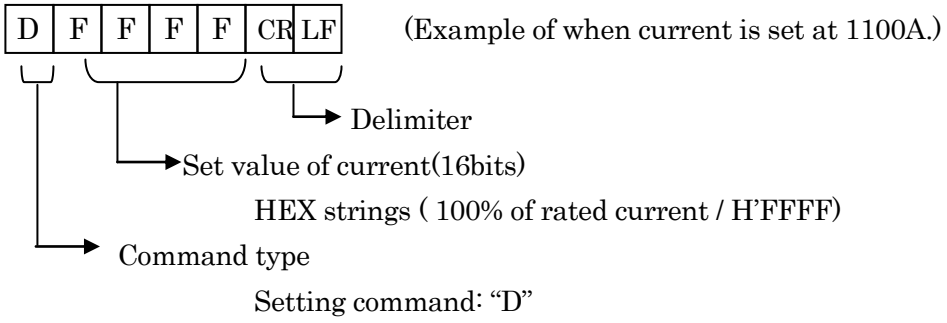

(2) RS232C monitor signal (SEND at the supply)

(A). Status information in response to PC

a. Remote/ Local

b. Excitaion ON/ OFF

c. Ready/ Minor failure/ Major failure

d. Output current

e. Porality

f. ID number

(B). Response format

(Example of when the supply is in the REMOTE operation mode and ready, output current is 1100A and porarity is +.)

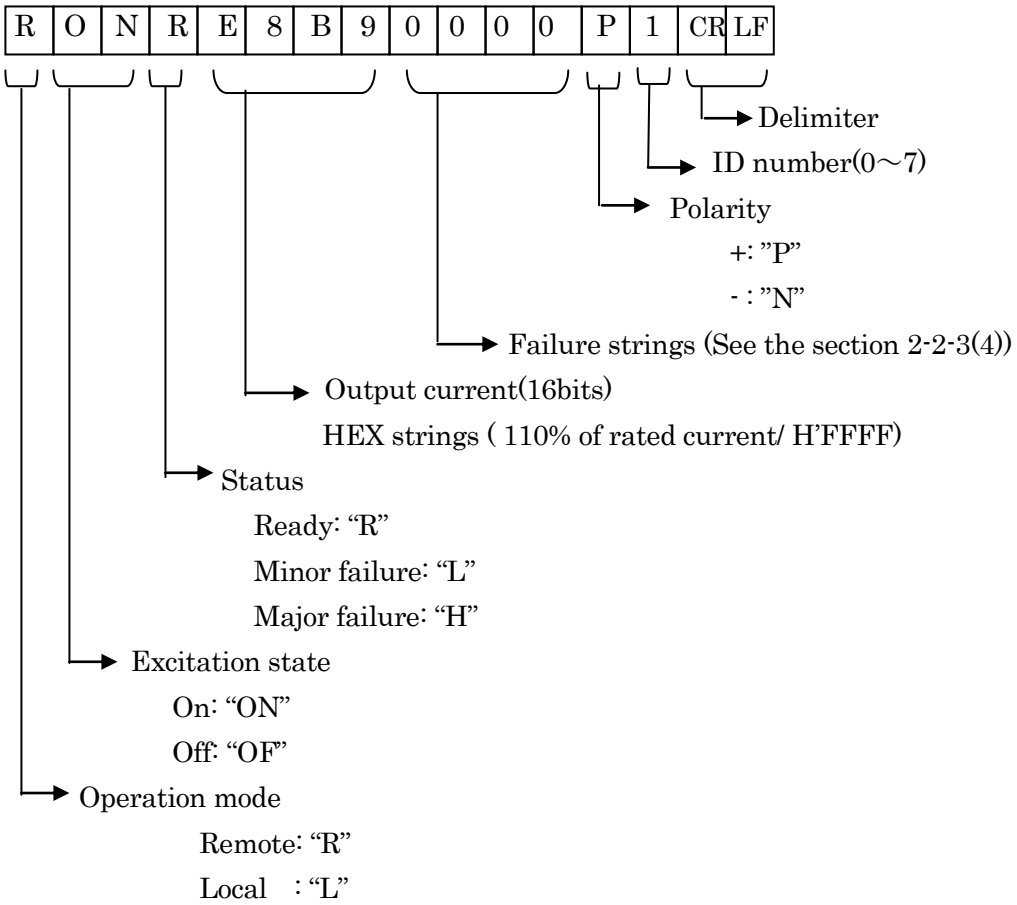

The supply returns the response to PC when starting up, receiving command of “monitor status” or changing its status (for example: Excitation On ⇔ Off , Remote ⇔ Local).

In the remote control operation, a PC for remote control needs to be started up before turning on the CONTROL breaker of the supply.

(3) External interlock signal (RECEIVE)

(A). Alarm signal from MAGNET

a. Magnet failure (water failure or overheat)
When a failure occurs in the magnet, open the relevant contact.
The contact should be a non-voltage floating contact that is available to use with 24V/ 0.05A or more.

2-2-3 Other functions

(1) Polarity switch

A contact switch that can manually reverse output polarity. A limit switch to detect polarity is attached to this switch in order to allow the supply to indicate polarity both at remote and local site.

(2) ID number

The supply sends an ID number signal to be identified by other remote devices.
Three DIP switches set a number (0-7) as an ID number.

(3) Receipt of correction signal from NMR

The supply can add an analog correction signal from NMR that is prepared by a customer, to reference signal for setting current. Voltage of the corrention signal should be ranged wit hin ±5V. A differential ampliflier that has x1 gain receives the correction signal. Positive cor rection signal increases output current.
Output performance with a correction signal is not what the warranty covers.

2-2-4 Protection function

(1) All functions required to use a power supply safely are provided.

(2) Faillure information is indicated by LEDs on the control panel to inform which part fails. When a failure occurs, the supply operates as follows:

- Relevant LEDs are latched.
- Response including failure information is send to a remote PC.
- When the RESET switch on the control panel is pushed or the supply receives a reset command from a remote PC, the supply checks remaining failure. If no failure, the supply turns off LEDs and releases interlock. Then the supply returns to ready state which can be operated.
- "SMOKE," "TR," and "OVEN" are minor failures. In the case of a minor failure, the supply is keeping EXCITATION ON state with indicating failure.
-

(3) Supplement

a. To be able to check easily at the local site which supply has a failure, a fault indication light (red) is placed on the upper side of the front door.
b. Interlocks are held in the EXCITATION ON state and not held in the EXCITATION OFF state.
c. When a communication error occurs during the remote operating mode, the last state is kept.
d. Interlocks are released by reset operation from the place chosen by either operation mode.
e. To recognize a part of failure in the magnet (i.e. overheat and water failure) are indicated separately on the front door of the supply.

(4) Failure list

Failure name	Failure bit*	Failure string*	Type
a. MAG. TEMP	0	4	Major failure
b. MAG. WATER	1		
c. DCOC	0		
d. DCOV	0		
e. WATER	1	8	
f. OH	0		
g. ACOC	0		
h. FUSE	0		
j. DOOR	0	0	
k. FAN	0		
l. GROUND	0		
m. ES	0		
n. SMOKE	0	0	Minor failure
p. TR	0		
q. OVEN	0		
	0		

*When a failure occurs, related failure bit is set to "1."

*Failure bits and strings in the table are of the case when MAG. WATER and WATER failures occur.

2-2-5 Current setting

Current can be set by setting current operation from the place chosen by either operation mode. REMOTE or LOCAL SWITCH on the control panel can switch an operation mode.

(1) Local operation

The following is a procedure to set current:

a. Set a current value by CURRENT SET SWITCH.
b. To output current, push SET SWITCH..

It takes about 60 seconds until actual current reaches to rating.

(2) Remote operation

See the section 2-2-2

2-2-6 Monitoring

(1) Output current

a. 4-1/2-digit display (□□□□.□A)

b. BNC connector (insulated) Signals from this connector is insulated by the insulated buffer amplifier.

c. BNC connector (direct-coupled)

(2) Output voltage

a. 4-digit display (□□□.□V)

b. BNC connector (insulated) Signals from this connector is insulated by the insulated buffer amplifier.

(3) RS232C signal to PC

a. Output current strings 16bits, HEX strings (110% of the rated current/ H'FFFF)

*When an actual current is equal to the rated current,
Error between an actual current and a set value is ±0.1%.
Error between an actual current and a monitor value is ±0.1% at digital signal with RS232C,
±0.5% at display on the control panel.
±0.1% at BNC connector..

2-2-7 I/O signal list

NO.	Signal name	Receive/ Send	Type of signal	Signal mode	Communicate with
1	EXCITATION ON	Receive	DI	RS-232C	PC
2	EXCITATION OFF				
3	RESET INTERLOCK				
4	CURRENT SET (16bits)				
5					
6					
7	ON/OFF	SEND	DO	RS-232C	PC
8	READY				
9	REMOTE/ LOCAL				
10	POLARITY +/-				
11	MAJOR FAULT				
12	MINOR FAULT				
13					
14	MAG. TEMP				
15	MAG. WATER				
16	DCOC				
17	DCOV				
18	WATER				
19	OH				
20	ACOC				
21	FUSE				
22	DOOR				
23	FAN				
24	GROUND				
25	ES				
26	SMOKE				
27	TR				
28	OVEN				
29	MAG.PS DISCRIMINATION				
30	CURRENT MONITOR(16bits)	Send	DO	RS-232C	Computer
31					
32					
33	MAG. WATER	Send	Contact	Alternate	Dipole magnet
34	MAG. TEMP				
35					

2-3 General specification

2-3-1 Structural specification

(1) Painted color	: Main body 5Y 7/ 1 medium gloss
	: Base 5Y 7/ 1 medium gloss
(2) Wire color code	: Pursuant to JEM1122.
(3) Language	: Labels on the front panel are printed in English.

2-3-2 Environmental condition

(1) Altitude	: 1000m or less
(2) Installation	: Stationary indoor place with no vibration nor mordant gas
(3) Temperature	: 5-44 degrees Celsius
(4) Humidity	: 10-98%
(5) Radiation	: 10^3 Gy/ 20 years

2-3-3 Cooling water

(1) Feed-water temperature	: 35 degrees Celsius or less
(2) Electric resistivity	: 1 MΩ·cm or more
(3) Inlet pressure	: 0.98 MPa (MAX)
(4) Exhaust back pressure	: 0.20 MPa (MAX)

3. Shape and dimension

See the exhibited external drawing.

Notes

(1) The base is basically separatable from the main body and is locked with holl anchors.

(2) Ground terminals to which two 38mm^2 grouding cables can be connected are installed. Ground termanals for enclosure and for signal are placed separately.

(3) External terminal block has 5 or more spare terminals.

(4) Protection covers are placed over exposed areas that have voltage of 100V or more.

(5) Labels that are printed with parts name and parts number are placed on the surface of the supply.

Details are described in the external drawing.

Table 1. Rated values for HES DOPOLE MAGNET POWER SUPPLY

Name of Power supply	Load Name of Coil	Rated voltage Eo (V)	Rated current Io (A)	Rated power Po (KW)	Cable (*2) drop Ecb (V)	Load constant (*1)		Monitor	
						L (H)	R (mΩ)	Voltage	Current
DM-PS	DM	250	1100	275	(250sq*3p) 4.4	1.2	185	300V/ 10V	1500A/ 10V

Input power: AC480V±10% 3-phase 47-63Hz, Input voltage unbalance: +5%, Line regulation: ±3%
(A terminal for a 420V tap is installed on the primaly side of the main transformer.)

Note

*1 ··· Load constants in the table are design values and the rated voltage is calculated in expectation of +5% error.

*2 ··· Cable drop value in the table is calculated on an assumption that three of the 250mm^2 cables are lined along a 100m path in parallel when the cable temperature is 90 degrees Celsius.

Keep an actual cable drop value below the value in the table.

USER'S GUIDE

1. Outline

This is a constant current DC power supply (hereinafter called "the supply") used for excitation and demagnetization of Dipole Electromagnet (D). (Rated voltage: DC250V/ Rated current: DC 1100A)

Regulation principle: Series transistor and thyristor (SCR) preregulation

2. Specification

(1) Electric specification

Refer to the Specification sheet.

(2) Structure

Refer to EXTERNAL DRAWING, and CONTROL PANEL DRAWING.

3. Transportation and installation

(1) Do not give a strong vibration or strong impact during transportation and installation.
All of the four eye bolts should be used in crane operation of the supply.
Actual weight of the supply is 2980kg.

(2) Do not lay the supply sideways during transportation.

(3) Fix the channel base of the supply on the floor by anchor volts.
See EXTERNAL DRAWING for the hole sizes and positions.

(4) Secure a sufficient distance of 1.0 m or more both in front and rear of the supply to secure a space for doors and airflow respectively.

(5) After installation, inspect the inside of the supply to check any troubles as follows possibly occurred during transportation.

- Detached parts
- Loosened bolts or screws
- PCBs detached from socket
- Cracks in the protection covers

4. Connection of cables (Cables are need to be prepared by the customer.)

See EXTERNAL DRAWING "DWG No. A034A201C."

4-1. AC input cable

(1) The part indicated by the lead line 5 in the drawing is where the AC input cable is connected to.

Connect cables following the labels "U," "V," and "W."

Caution!! Wrong order of phase may cause an accident.

Appropriate line voltage is AC480V±10% 47-63Hz. Appropriate line voltage can be changed to 420V or 480V by reconnecting the terminals of the internal transformers (T1, T2.)
When shipping the supply, the terminal "480V" of transformers (T1, T2) was connected to.
The maximum input power is 352kVA.

(2) Be sure to connect the ground cable to "E."

4-2. DC output cable

(1) The part indicated by the lead line 6 in the drawing is where the DC output cable is connected to.

Connect cables following the labels of “P” and ”N.”

When the LED "POLARITY+" on the control panel, that indicated by the lead line 8, is lighting, this symbol on the label rightly shows the polarities of the output terminals. (Refer to the CONTROL PANEL DRAWING “DWG No. A034A301A”.)

When the LED “POLARITY-” is lighting, the polarities reverse each other.

(2) When the terminal block of “Signal common” (TB2, 2P), that indicated by the lead line 12, is open, the output terminals float from the ground potential that connected at 4-1-(2).

When the terminal is closed, either output terminal has the ground potential:

Polarity LED	*Label of terminal on the ground potential*
POLARITY+	P
POLARITY-	N

Before shipping, the terminal was closed.

4-3. Control cable

(1) Lead line 13 in the drawing indicates “External signal terminal block” (TB3, 18P). This terminal block is connected with cables for “V I monitor output,” “MAGNET TEMP” and “MAGNET WATER.”

Connect them following the figure below if necessary.

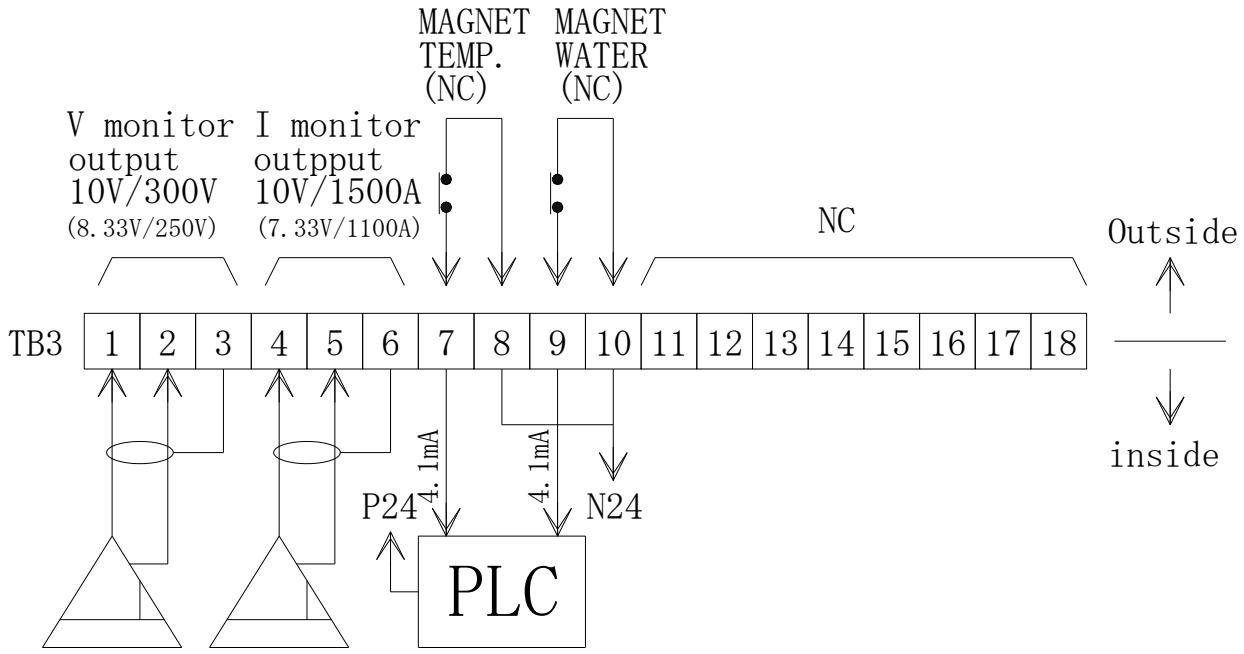

(2) Lead line 14 in the drawing indicates “RS232C connector” (CN1, D-sub 9pin). This connector is connected with “RS-232C signal” cable for remote control.

.

Connect the “RS-232C signal” cable with the connector and use the gender bender if necessary. When shipping the supply, the gender bender was attached on CN1.

(3) Lead line 15 in the drawing indicates the connector of “NMR signal input” (CN2). This connector is connected with a cable for "Correction signal" that comes from NMR. The receptacle type of this connector made by Lemo Company is “EGG OB 304 CLL.”

・Circuit diagram of “NMR signal input”

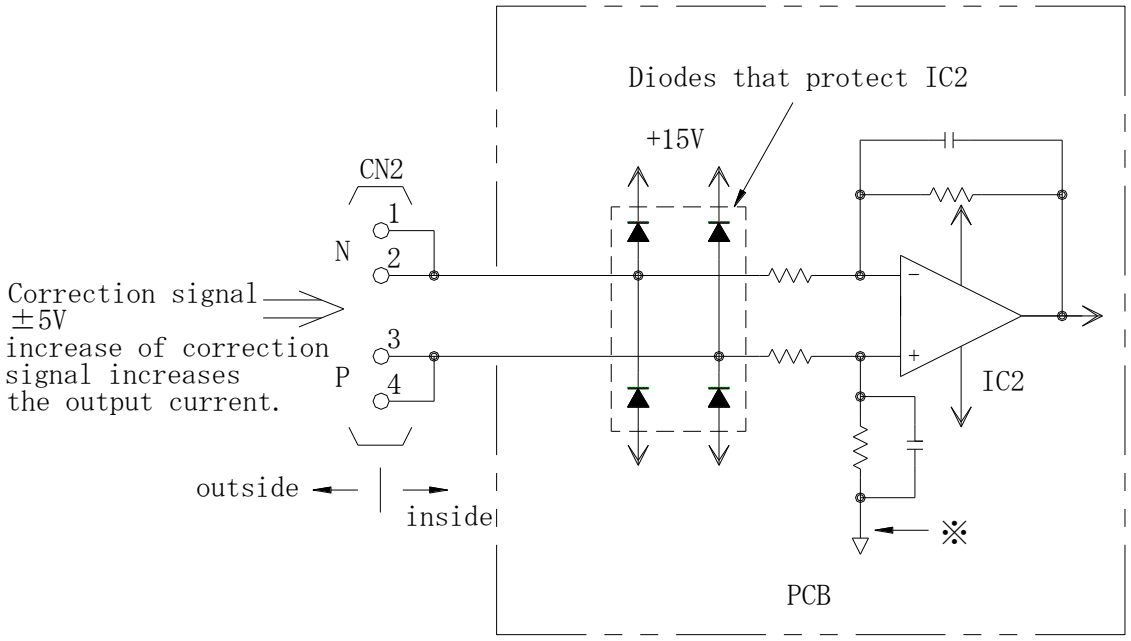

Caution!!

Electric potential of the part indicated by “*1” is as follows:

Polarity LED	*Potential*
POLARITY+	Almost same as the potential of terminal “P”
POLARITY-	Almost same as the potential of terminal “N”

The diodes protecting IC2 clamp the potential of the input terminals ±15V for the potential of “*1”.Therefore, keep the voltage of "NMR signal input" within 15V plus or minus the potential of “*1”.

Exceeded voltage may damage the diodes and ICs, etc.

5. Connection of cooling water

Connect the cooling water pipe following EXTERNAL DRAWING “DWG No A034A201C,” WATER SYSTEM DIAGRAM “DWG No A034M118A” and the labels of “IN” and “OUT.”

6. Polarity switching

Lead line 17 in EXTERNAL DRAWING indicates “POLARITY Switch.” The switch reverses the output polarity. You can switch “POLARITY Switch” manually by “Switch lever” that is indicated by the lead line 16.

(1) Do not switch the polarity when EXCITATION OFF SWITCH (indicated by the lead line 9 in CONTROL PANEL DRAWING) is not lighting.
Do not switch the polarity when the output current is not 0 A.

Danger!!
Switching with flowing current can cause serious injuries such as a burn. Moreover, even if the current is 0A, switching with EXCITATION ON SWITCH (indicated by the lead line 10 in CONTROL PANEL DRAWING) lighting can produce enormous voltage. Do not switch the polarity while EXCITATION ON SWITCH is lighting.

・For safety reasons, two transparent covers are attached to the switch inside the door. The covers prevent easy handlings that can lead to malfunction.
・When the door is open, the supply is automatically turned off by the interlock.

(2) Relation between the output polarity and the direction of “Switch lever”

Direction of “Switch lever”	*Output polarity*
“Normal”	POLARITY +
“Reverse”	POLARITY -

See the LED on the control panel for checking the output polarity.

7. ID number

This supply sends an ID number signal to be identified by other remote devices.
Three DIP switches set a number (0-7) as an ID number.
Factory setting of ID number is “0.”

7-1. Location of DIP switches

On the “PoS ADDRESS” panel that is indicated by the lead line 18 in EXTERNAL DRAWING

7-2. Setting ID number

Set a number with the DIP switches in accordance with the diagram below, which is printed on a label on the “PoS ADDRESS” panel.

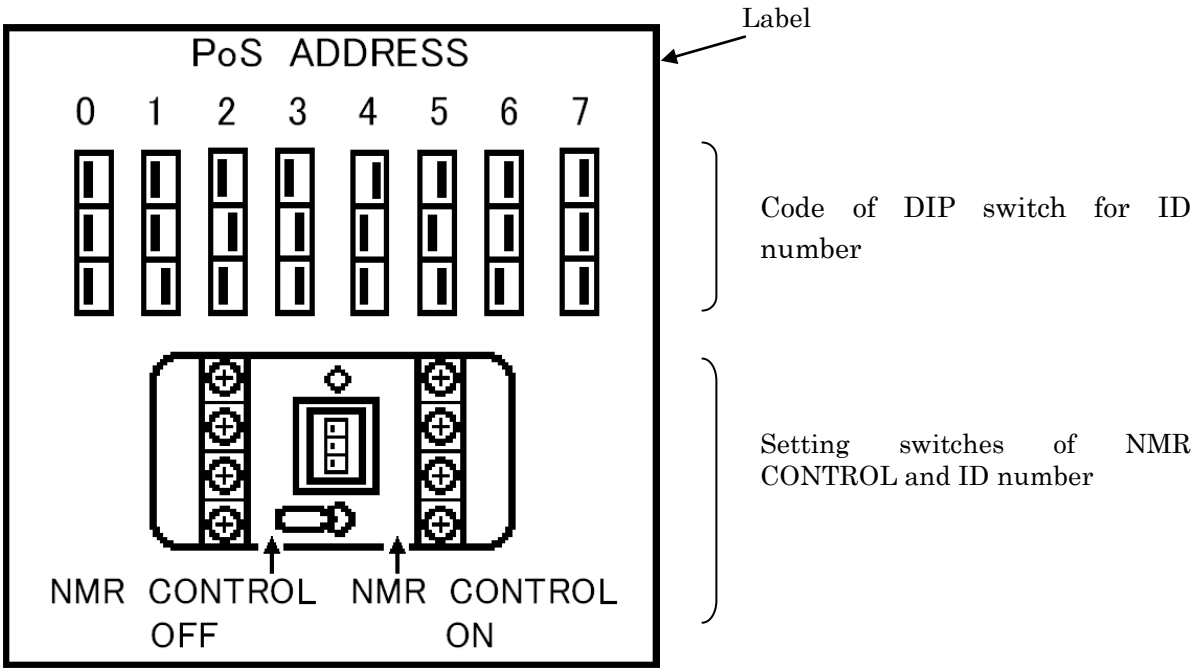

8. Enabling "Correction signal" from NMR

8-1. You can enable or disable the "Correction signal" mentioned at the section 4-3-(3). If you choose “NMR CONTROL ON,” “Correction signal” is added to the set value of output current. If you need not add it, choose “NMR CONTROL OFF.” Before shipping, the switch was directed to OFF.

8-2. Setting procedure
There is a switch to select “NMR CONTROL ON/ OFF” on the “PoS ADDRESS” panel. The diagram in the section 7-2 shows where the switch is located.

9. Control panel

9-1. Parts layout

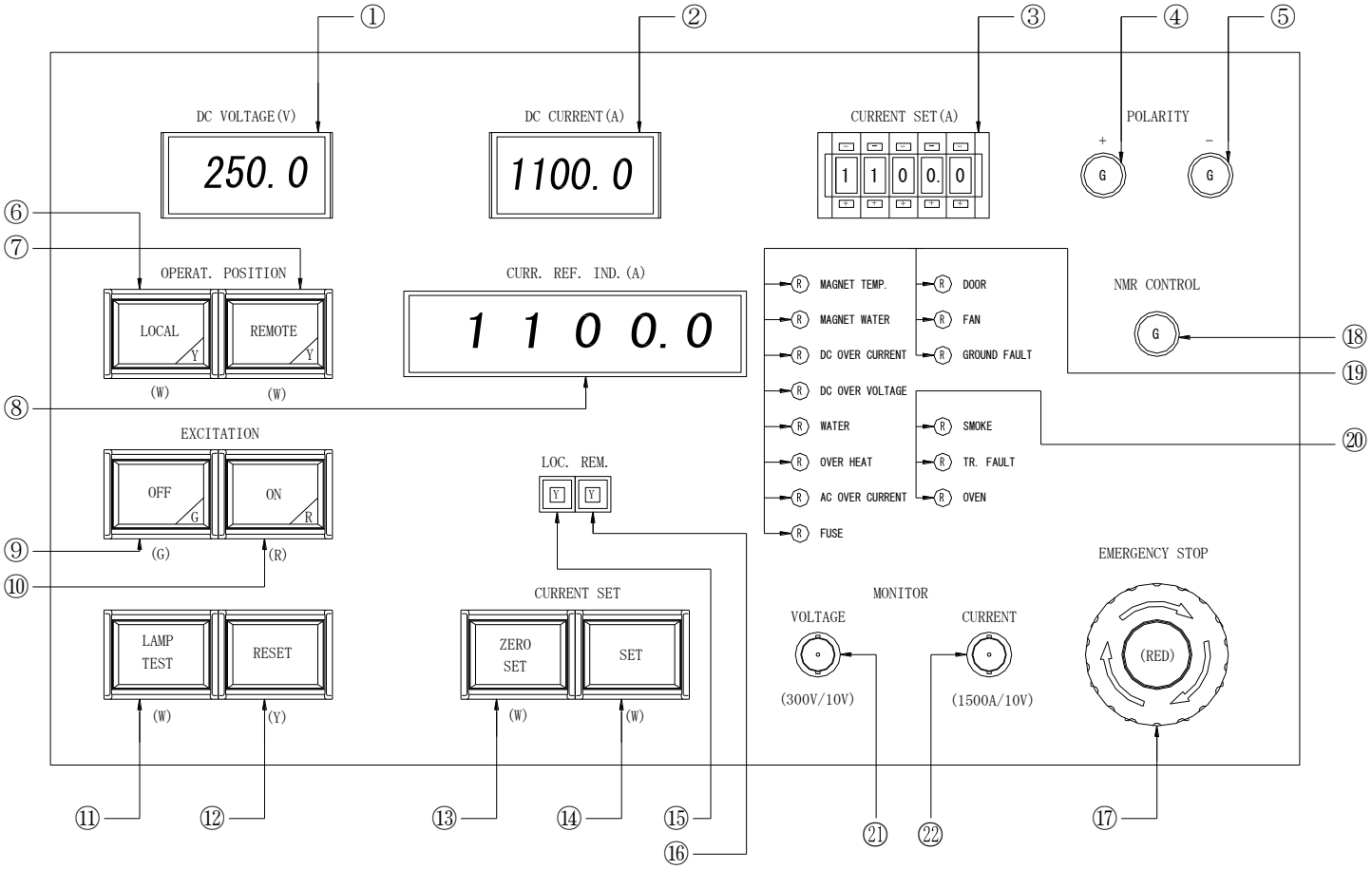

Front View

9-2. Parts function

Lead line numbers mentioned in the diagram in the section 9-1.

No.	Name	Function
1	DC VOLTAGE DISPLAY	A 4-digit display indicating output voltage. Regardless of polarity, a displayed value ranges from 0.0 to 250.0(V).
2	DC CURRENT DISPLAY	A 4-1/2-digit display indicating output voltage. Regardless of polarity, a displayed value ranges from 0.0 to 1100.0(V).
3	CURRENT SET SWITCH	A 5-digit switch for setting output current during local operation. To start sweeping of current, push "SET SWITCH" (No. 14) after setting output current with this switch.
4	POLARITY + (PLUS) STATE INDICATOR	When this indicator is lighting: Polarity of output terminal labeled "P" is + (plus) Polarity of output terminal labeled "N" is - (minus) The indicator of No. 5 lights when this indicator is turned off.
5	POLARITY - (MINUS) STATE INDICATOR	When this indicator is lighting: Polarity of output terminal labeled "P" is – (minus) Polarity of output terminal labeled "N" is + (plus) The indicator of No. 4 lights when this indicator is turned off.
6 7	LOCAL/ REMOTE SWITCH	Two switches to change and notify operation mode. LOCAL and REMOTE operations are defined as follows: LOCAL ··· Operation on this control panel REMOTE··· Operation with "RS-232-C Signal" to the connector CN1 mentioned in the section 4-3-(2) ・On start-up, operation mode is REMOTE. ・Switching of operation mode with EXCITATION ON SWITCH (No.10) lighting turns off excitation state. ・When the two switches are pushed simultaneously, operation mode is REMOTE. ・Even if operation mode is REMOTE, you can turn off excitation state with EXCITATION OFF SWITCH (No.9). ・Operation mode has an effect on the following three operations: a. Excitation On operation b. Reset operation c. Current Set operation

No.	Name	Function
8 15 16	CURR REF INDICATOR LOC DISPLAY SWITCH REM DISPLAY SWITCH	A 5-digit display indicating a set value of output current. When the switch of No15 is pushed, a LOCAL set value is displayed. Similarly, a REMOTE set value is displayed when the switch of No.16 is pushed. A displayed value contains "Correction signal" from NMR. ・A value displayed on start-up is the last REMOTE set value.
9 10	EXCITATION OFF / ON SWITCH	Two switches to change and notify excitation state. Push ON switch to close the main electromagnetic switch (MS1) and to have the supply ready to output current. Push OFF switch to open the electromagnetic switch.
11	LAMP TEST SWITCH	A switch for checking lamps and LEDs. The following parts light when this switch is pushed: No. 4,5 POLARITY + / -, No. 6,7 LOCAL / REMOTE, No. 9,10 OFF / ON, No. 15,16 LOC. / REM., No. 18 NMR CONTROL, No. 19,20 INTERLOCK LED and Fault indication light above the control panel
12	RESET SWITCH	A switch to reset interlock. When a trouble is detected, INTERLOCK LEDs (No. 19, 20) on the control panel and fault indication light above the control panel light up. In EXCITATION ON state, interlocks are held and their LEDs remain lighting. You can reset these interlocks with this switch. In EXCITATION OFF state, interlocks are not held.
13	ZERO SET SWITCH	A switch to make output current 0A. In EXCITATION ON state, pushing this switch gradually decreases output current to 0A regardless of a value set by CURRENT SET SWITCH (No. 3).
14	SET SWITCH	A switch to increase or decrease output current to a set value. In EXCITATION ON state, pushing this switch makes output current come to a value set by CURRENT SET SWITCH (No.3).
17	EMERGENCY STOP SWITCH	An alternate switch for an emergency stop. Pushing this switch turns off excitation state as with pushing EXCITATION OFF SWITCH (No.9). During an emergency stop, fault indication lamp lights up. Rotate the switch clockwise until its head sticks out to release the supply from the state of emergency. This switch does not reset interlocks. Use RESET SWITCH to reset interlocks.

No.	Name	Function
18	NMR CONTROL STATE INDICATOR	An indicator that shows state of NMR CONTROL. If the switch mentioned at the section 8-2 is directed to the ON side, this indicator lights and “Correction signal” is added to a set value. If OFF, this indicator is turned off and “Correction signal” is disconnected from a set value of the control circuit.
19	MAJOR FAILURE INTERLOCK LED	LEDs to notify occurrence of interlock with major failure. When each major failure is detected, a related LED and fault indication light are turned on. Occurrence of interlock with major failure turns off excitation state automatically. In EXCITATION ON state, interlocks are held and their LEDs remain lighting. In EXCITATION OFF state, interlocks are not held.
20	MINOR FAILURE INTERLOCK LED	LEDs to notify occurrence of interlock with minor failure. When each minor failure is detected, related LED is turn on. Occurrence of interlock with minor failure does not turn off excitation state. In EXCITATION ON state, interlocks are held and their LEDs remain lighting. In EXCITATION OFF state, interlocks are not held.
21 22	VOLTAGE AND CURRENT MONITOR CONNECTOR	BNC connectors to output monitor signals of voltage and current. The ratio for voltage is 300V/ 10V. And the ratio for current is 1500A/ 10V. Outer conductor of the connectors are connected with the circuit common (*2) in the supply.

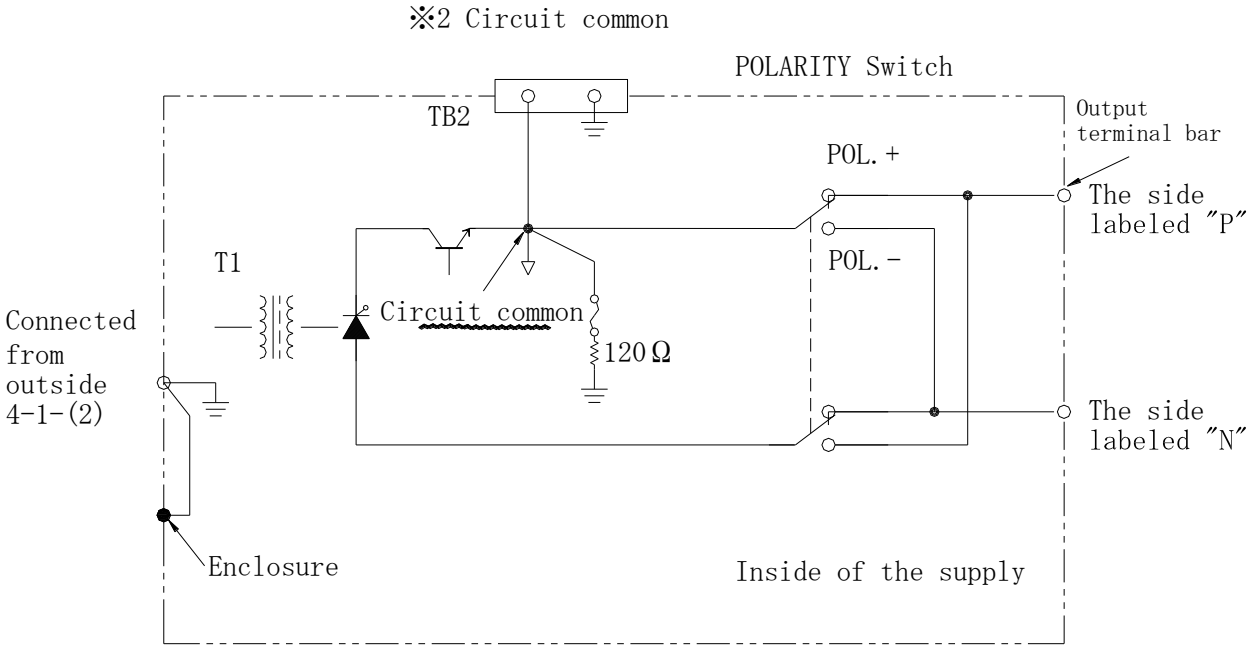

10. Operation procedure

10-1. Confirm that all the above-mentioned setup is done. (See the section 3-8.)

(1) Is there a sufficient space for airflow in front of the supply? Similarly, is there a sufficient space above the exhaust shutter of the supply?
(2) Is the AC input cable connected?
(3) Is the DC output cable connected?
(4) Is the control cable connected?
(5) Is the cooling water pipe connected? Are pressure and flow of water appropriate?
(6) Is polarity switched to an appropriate side?
(7) Is ID number set to an appropriate number?
(8) Is NMR CONTROL SWITCH directed to an appropriate side?
(9) Is a signal to release interlock coming from the load?

10-2. Operation

(1) To start up the supply, electrify AC input cable.
(2) Turn on CONTROL breaker that is assigned No. 9 in EXTERNAL DRAWING. Confirm that all three LEDs ("U," "V," and "W"), that is assigned No.4 in EXTERNAL DRAWING, are turned on.
(3) Turn on MAIN POWER breaker that is assigned No. 7 in EXTERNAL DRAWING.
(4) Operate on the control panel (See the parts layout diagram at the section 9-1)

(4)-1. LOCAL operation mode

・To enter into the local operation mode, push LOCAL SWITCH (No. 6).
・To turn excitation state on, push EXCITATION ON SWITCH (No.10)
・Set a value of output current with CURRENT SET SWITCH (No.3)
・To output current, push SET SWITCH (No.14)
・Push LOC DISPLAY SWITCH (No.15) to check a set value.
・Push ZERO SET SWITCH (No.13) to complete excitation. After confirming the output current becomes 0A, push EXCITATION OFF SWITCH (No.9).

(4)-2. REMOTE operation mode

・Check the lighting of REMOTE SWITCH (No. 7). If operation mode is LOCAL, push REMOTE SWITCH to enter into remote operation mode.
・Input a remote control signal into the supply in accordance with LOCAL/ REMOTE CONTROL MANUAL.
・Push REM DISPLAY SWITCH (No.16) to check the set value.
・Set output current to 0A to complete excitation. After confirming the output current becomes 0A, turn off excitation state.

(5)When you shut down the supply, turn off MAIN POWER breaker primarily and then turn off CONTROL breaker.

11. Interlock

Name	Detection part	Occurrence condition	Type
MAGNET TEMP	Terminals (TB3 No.7, 8) Refer to the section 4-3-(1)	Connection between terminals (TB3 No. 7, 8) is open	A
MAGNET WATER	Terminals (TB3 No.9, 10) Refer to the section 4-3-(1)	Connection between terminals (TB3 No. 9, 10) is open	A
DC OVER CURRENT	IC (5-2) on PCB7	Output current ≥ about 1200A	A
DC OVER VOLTGE	PLC	Output voltage ≥ about 275V	A
WATER	Flow switch (F.SW)	Flow rate of water : ≤ 41 L / min (ON) ≥ 45 L / min (OFF)	A
OVER HEAT	Thermal switches (THS1-5) Built-in thermal switches of thyristors (SCR 1-6)	Temperature of THS1~3 ≥ about 150℃ THS4~5 ≥ about 120℃	A
AC OVER CURRENT	Electromagnetic switch (MS1)	AC input current ≥ about 500A	A
FUSE	Protection fuses for semiconductor (PF1~3)	Secondary current of the main transformer (T1) ≥ about 1200A	A
DOOR	Door switches (DOOR. SW 1~6)	One or more of the 6 doors are open.	A
FAN	FAN ALARMs (1~5)	One or more of FAN (1-5) stop	A
GROUND FAULT	PCB8	Leak current ≥ 10mA (This is factory setting)	A
SMOKE	Smoke detector (SMOKE)	Photoelectric spot type detector (Type II)	B
TR.FAULT	Alarm-fuses (AF 1~14. x12)	Emitter current ≥ about 10A	B
OVEN	Thermoregulator (SC1)	Constant-temperature control error of thermoregulator	B

A: Major failure (See No.19 in the table of the section 9-2.)
B: Minor failure (See No.20 in the table of the section 9-2.)

To rest interlocks, push RESET switch after settlement of failure.

12. Maintenance check

12-1. Daily check

Check the following points one or two times a day to prevent breakdown or accident.

1) Abnormalities such as abnormal noise, abnormal odor, or smoke
2) Values on all displays
3) Lighting of all indicators and LEDs

12-2. Maintenance points

Follow TABLE 1 to conduct a periodic check.

1) Points to remember

Production of the supply is based on high reliability and easy maintenance, therefore daily maintenance is seldom needed. However, longtime use can produce a cause of trouble, depending on an environment and status of use. Periodic checking and cleaning are recommendable to maintain performance and to prevent troubles.

2) General notes

a. Never fail to turn off the supply of primary electric power (480V 3lines) to the supply when checking the inside of the supply unless absolutely necessary.

b. Use a circuit tester or similar instruments to check that no electric power remains in the supply when checking after shutdown.

c. As a rule, do not change the volume settings on PCBs. These volumes were precisely adjusted at our factory. Contact us if changes in the setting are absolutely needed.

d. Do not forget to reconnect detached parts after checking. Check that PCBs and relays are properly inserted into sockets.

e. When checking the control circuit, noise produced in a lead of a test instrument may cause malfunction. A checking measure should be carefully studied.

f. To prevent tools from being left in the supply, check and count them. Similarly, do not leave any nuts or bolts in the supply.

3) General check

a. Environmental conditions

Check that temperature and humidity surrounding the supply are appropriate.

b. Visual check

Check abnormalities such as abnormal odor, corrosion or discoloration of the parts inside, abnormal sound from fans or transformers, oil leak from the capacitor, or defective appearance.

c. Bolt check

Check that no bolts, nuts or screws are loosened. Tighten any loose parts.

d. Control circuit check

Check that all connecters and terminals are properly connected and that no solder corrosion or parts deterioration on PCBs occur.

e. Operational check

Check the behavior of the supply with displays and indicators.

4) Electrical check

a. Waveform observation on main circuit

Check waveforms at each part of the main circuit.

b. Waveform observation on control circuit

Check waveforms at each part of the control circuit.

5) Cleaning

a. Accumulated dust in the supply can causes insulation failure. Periodic cleaning is recommendable to prevent this.

b. Check that the air filters of the suction hole are not clogged with dust.

Table-1 Maintenance points

Contents	Check points	Interval					
		Daily	6M	1Y	2Y	5Y	10Y
Cables and conductors of main circuit	1. No loose bolts or no indications of overheat at the contact points of cables and conductors? Tighten any loose bolts.		O(OC)	O			
	2. No indications of overheat or no damage in the insulator?			O			
	3. No cracks in the insulators?			O			
	4. No strains in the conductors?			O			
	5. No tears in the coating of the cables?			O			
	6. Do clean up.			O			
Transformer and Reactor	1. No loose screws or indications of overheat around the terminals?			O			
	2. No indications of overheat on the coils?		O	O			
	3. No abnormal odor?		O(OC)	O			
	4. Do clean up.			O			
	5. No cracks in the insulators?			O			
	6. 3MΩ or more insulation resistance is needed.			O			
Relay and Contactor	1. No vibration sound when relays are turned on and off?			O			
	2. The timer is set properly?			O			
	3. Surge protective diodes have no damage?			O			
	4. No indications of overheat on the relay coils?			O			
PCB	1. Pull out PCBs and clean them.					O	
	2. No oil leak from the capacitors or no burns of the resistors on PCBs?					O	
Display	1. All displays indicate appropriate values?	O					
	2. No loose sockets?			O			

Contents	Check points	Interval					
		Daily	6M	1Y	2Y	5Y	10Y
Rectifier and its surroundings	1. Connectors and cables are fastened tightly? 2. 1MΩ or more insulation resistance is needed. 3. Do clean up.		O(OC)	O O	O		
Fan	1. No abnormal vibration or abnormal sound during operation? 2. Connectors are fastened tightly? 3. No indications of overheat on the motors? No abnormal odor?	O		O O			
Indicator and LED	1. All indicators and LEDs can light? 2. Do clean up.	O		O			
Operational check	1. Check the waveform of signal at each point on the control circuit and gate circuit while turning the supply on/ off several times. 2. Check that interlocks are effective and able to be indicated on the control panel. 3. Check the zero points in the amplifier. 4. Check the waveform of signal from the thyristor at the terminals of the filter capacitor while running the supply. Check the ripple voltage of output terminal while running the supply. 5. Check the waveform of voltage at the AC input terminals (3 lines). 6. Check set values for current. 7. Check that no abnormal sounds or no hitting sounds are heard.	O		O O O O O			

("OC" = ONLY ONCE)

LOCAL/ REMOTE OPERATION MANUAL

1. Control panel (for LOCAL operation)

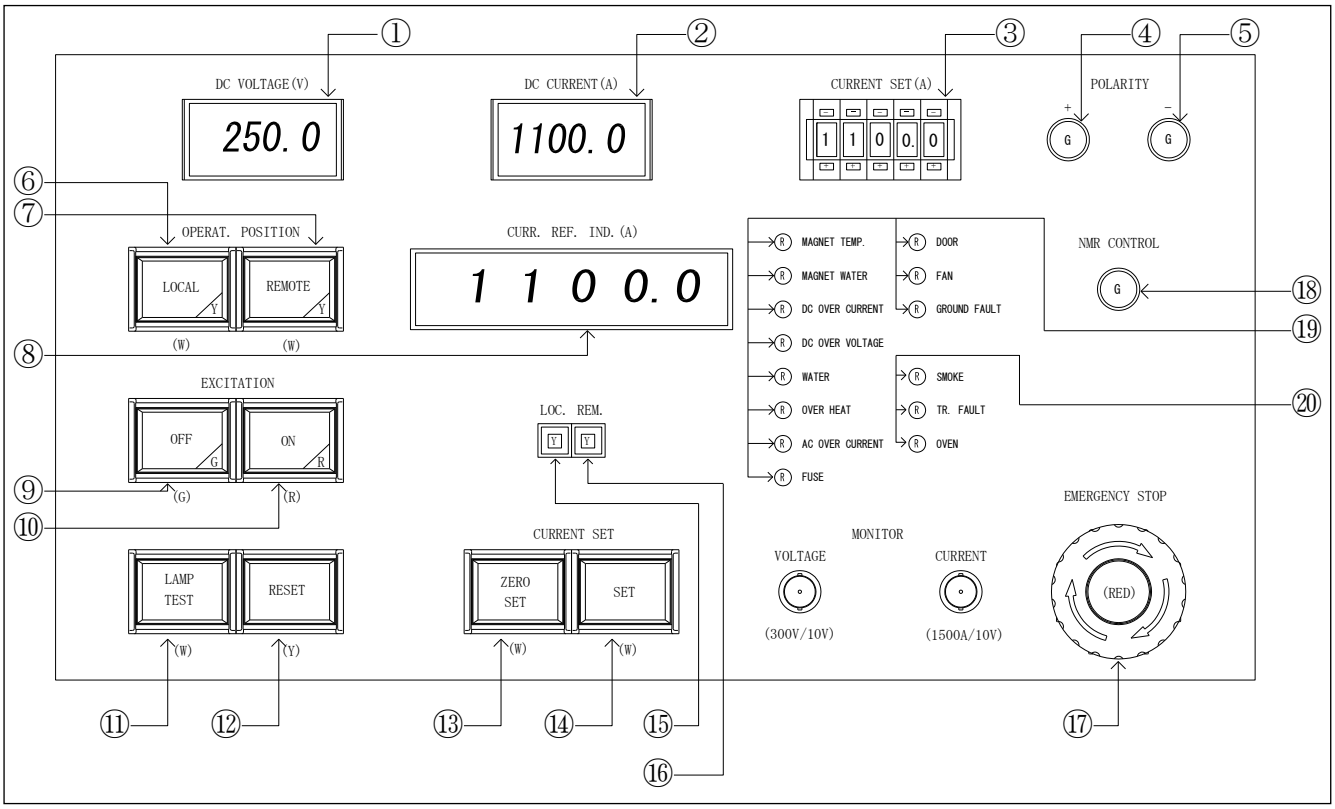

Figure 1. Parts layout on control panel

No.	Part name	Initial value (On start-up)	At LOCAL operation mode	At REMOTE Operation mode
1	DC VOLTAGE DISPLAY	About 000.0	PV	PV
2	DC CURRENT DISPLAY	About 0000.0	PV	PV
3	CURRENT SET SWITCH	Last setting	E	D
4	POLARITY + (PLUS) STATE INDICATOR	Depends on the polarity switch.	PS	PS
5	POLARITY - (MINUS) STATE INDICATOR		PS	PS
6	LOCAL SWITCH	OFF	S	E
7	REMOTE SWITCH	ON	E	S
8	CURR REF INDICATOR	Last value set in the remote operation mode	PV	PV
9	EXCITATION OFF SWITCH	OFF (In REMOTE operation mode)	S	E
10	EXCITATION ON SWITCH	OFF	S	D
11	LAMP TEST SWITCH		E	E
12	RESET SWITCH		E	D
13	ZERO SET SWITCH		E	D
14	SET SWITCH		E	D

No.	Part name	Initial value (On start-up)	At LOCAL operation mode	At REMOTE Operation mode
15	LOC DISPLAY SWITCH	OFF	S	S
16	REM DISPLAY SWITCH	ON	S	S
17	EMERGENCY STOP SWITCH		E	E
18	NMR CONTROL STATE INDICATOR	Depends on a NMR control switch.	PS	PS
19	MAJOR FAILURE INTERLOCK LED	OFF (usually) ON(When interlocks were not released before shutdown.)	PS	PS
20	MINOR FAILURE INTERLOCK LED		PS	PS

PV: Displays a present value

PS: Displays a present state

E: Enabled

D: Disabled

S: Displays its selection

2. Remote control

2.1 Command from PC

a. Excitation ON

b. Excitation OFF

c. Reset interlock

d. Monitor status

e. Set current

2.2 Command format (RECEIVE at the supply)

Command (1) does the operation a, b, c and d mentioned above. Command (2) can set an output current.

(1) Control command

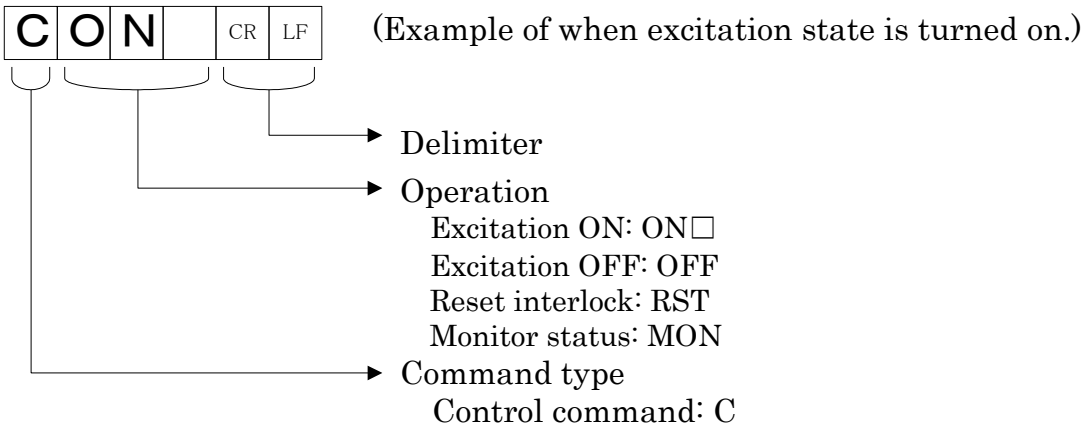

(2)Setting command

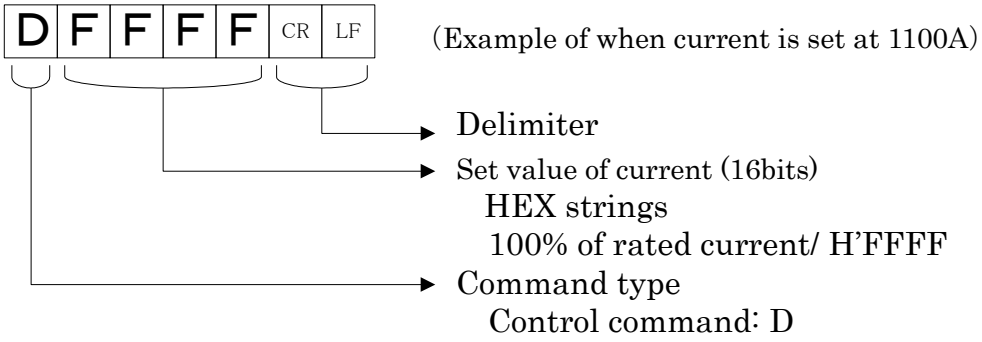

2.3 Response format (SEND at the supply)

(Example of when the supply is ready, excitation state is ON, output current is 1100A, polarity is positive and ID number is “1.”)

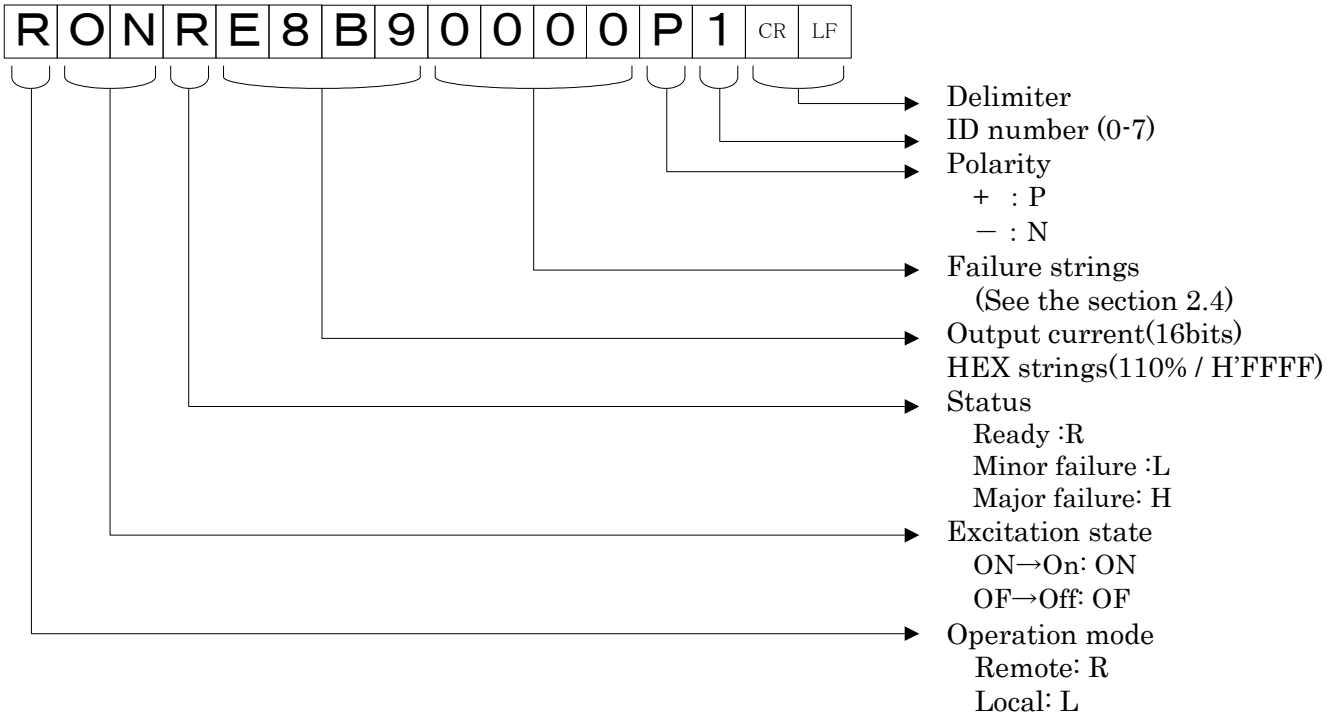

2.4 Failure list

No.	Failure name	Failure bit	Failure string	Type
1	MAGNET TEMP.	0	4	Major failure
2	MAGNET WATER	1		
3	DC OVER CURRENT	0		
4	DC OVER VOLTAGE	0		
5	WATER	1	8	
6	OVER HEAT	0		
7	AC OVER CURRENT	0		
8	FUSE	0		
9	DOOR	0	0	
10	FAN	0		
11	GROUND FAULT	0		
12	EMERGENCY STOP	0		
13	SMOKE	0	0	Minor failure
14	TR. FAULT	0		
15	OVEN	0		
16	Spare (unused)	0		

*When a failure occurs, related failure bit is set to “1.”

*Failure bits and strings in the table are of the case when MAG. WATER and WATER failures occur.

3. Flow chart of operation

3.1 LOCAL operation mode

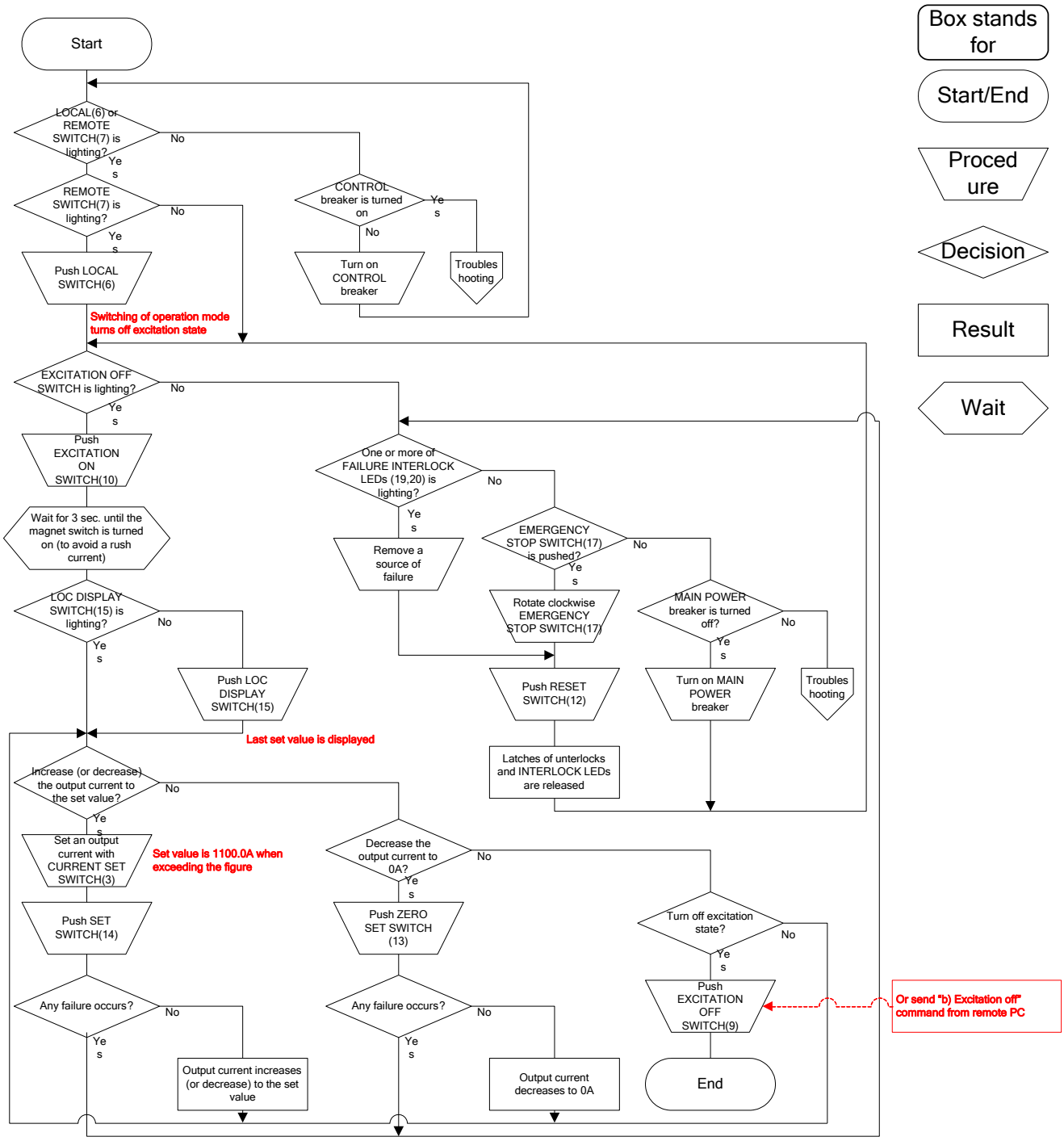

3.2 REMOTE operation mode

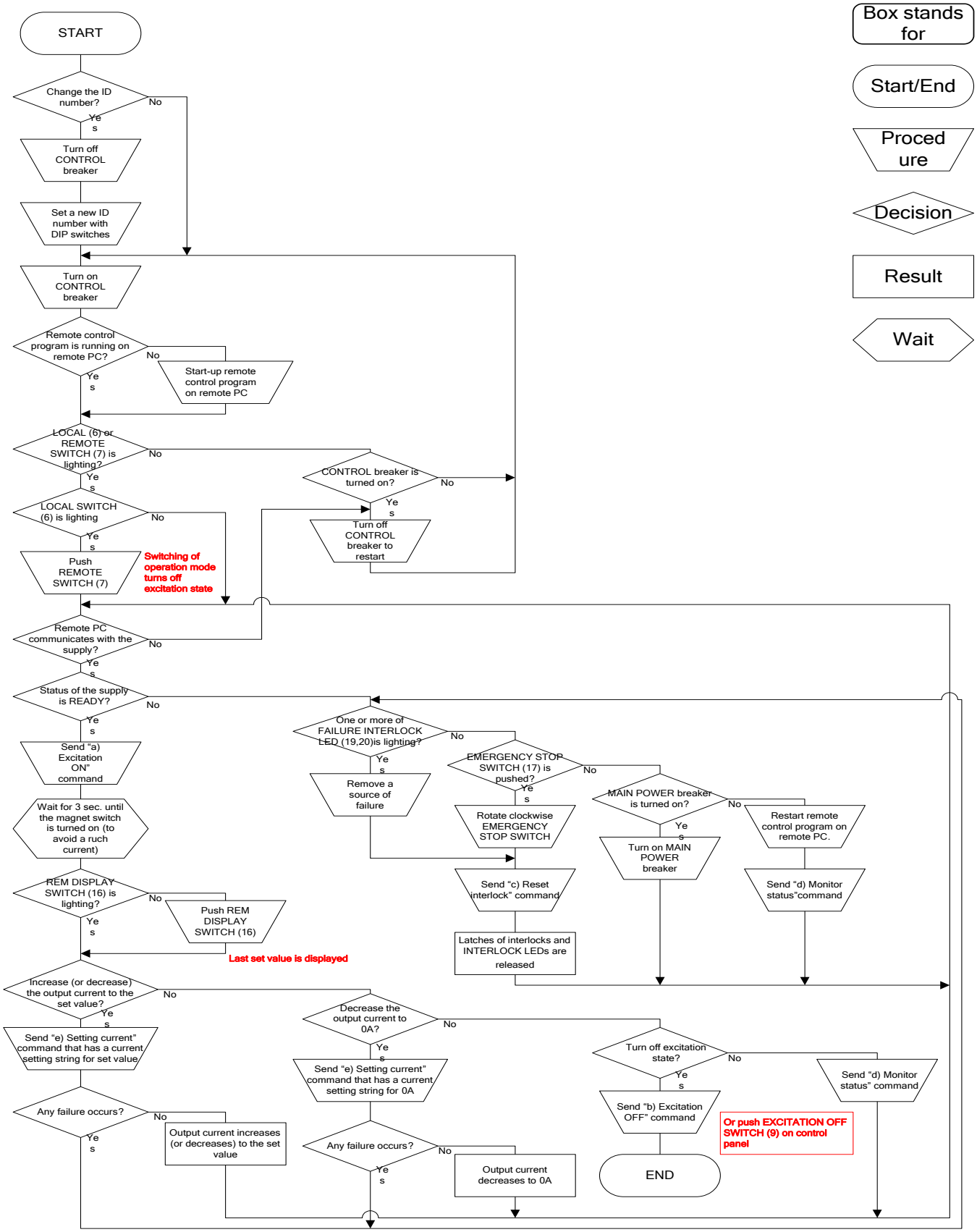

4. Sample program for remote control (For operation check)

4.1 Communication configuration

a. Character length: 8 bits
b. Parity: Odd
c. Baud rate (bps): 9600 bps
d. Stop bit length: 1 bit

4.2 Cable and connector

Use a cross type RS232C cable. (Internal wiring of the supply is straight.)

The connector on the supply is a 9-pin female type. When the cable connector is female, use the attached gender bender.

[Spec of gender bender]

Maker: Sunhayato, Model No.: SGC-D9PP, Size of screws: M2.6

4.3 Sample program

Language: Labview 8.2.1

Sample vi: Remote_contorol.vi (See the screen 1)
Control panel.vi (See the screen 2)

After setting a communication configuration on “Remote_control.vi,” “Control panel.vi” is displayed. Then you can operate remote control on “Control panel.vi.”

Inspection report

No.	Item	Method	Criterion	Result	Classification 1	Classification 2	Judgment
1	Construction check	Measure external size. Check painted color and wiring.	Same as external drawing and circuit diagram. No danger.	Confirmed	O	-	good
2	Insulation check Insulation resistance	Measure following resistance: 1) Between AC input terminal and enclosure.	10MΩ or more at DC500V	200MΩ or more.	O	-	good
		2) Between DC output terminal and enclosure. Note: Earth cable of main circuit, earth detector, and water should be removed in this check.	10MΩ or more at DC500V	200MΩ or more.	O	-	good
	Electric strength	Check applied voltage between AC input terminal and enclosure does not cause any failure. Note: Part which does not have enough capacity to resist voltage should be removed. (Ex. capacitor etc.)	No failure with voltage of AC2kV for 1 min.	Confirmed Leak current ≤ 10mA	O	-	good
3	Water pressure proof check	Using water-pressure-proof tester, check water-pressure impressed to water circuit does not cause any failure.	No leak water and no pressure drop with water pressure of 1MPa (10kgf/cm^2) for half hour.	Confirmed	O	-	good

Pr No.	A10611021

See the table 1 in page 12.

Classification

1. Factory test at our factory
2. Witnessed test at our factory

O: Done at this test.
- : Not done at this test.

Environment	
RT	26 deg C
Humidity	65 %
Weather	Fine

Inspection report

Pr No.	A10611021

No.	Item	Method	Criterion	Result	Classification 1	Classification 2	Judgment	
4	Operation check	Check each operation shown on page 10-11	Each operation follows specification sheet. Each interlock operation has no failure.	Confirmed	O	-	good	
5	Performance check Rise time Ringing	Measure rise time of current and ringing. Test point: External DCCT or Shunt resistor Instrument: Recorder and timer	(1)Rise time from 0A to 1100A is about 60 sec. (2)Ringing with rising current is within 1%.	(1) 57.5 seconds (2) Within 1%	O	-	good	(1) See the table 2-4 in page 13-15. (2) See the table 5 in page 16.
	Voltage ripple	Measure voltage ripple at rated voltage. Test point: DC output terminal Instruments: Oscilloscope	Load: R R+L		-	-	-	
	Current ripple	Measure current ripple at rated current. Test point: External DCCT Instruments: Oscilloscope	10 ppm or less at 1100A. Load: Actual load	7.4 ppm	O	-	good	See the graph 1 in page 21.
	Voltage stability	Measure voltage stability at specified voltage. Test point: Instrument: Voltage source and recorder			-	-	-	

Inspection report

Pr No.	A10611021

No.	Item	Method	Criterion	Result	Classification 1	Classification 2	Judgment	
	Current stability	Measure current stability at specified current. Test point: External DCCT or Shunt resistor Instrument: Voltage source and Recorder	10ppm / 8 hr or less. Initial drift for half hour is excluded. (1)At rated current (2)At 10% of rated current	(1) 9.0ppm / 8hr (2) 9.9ppm / 8hr	O	-	good	(1) See the table 6, 7 in page 17,18. (2) See the table 8 in page 19.
	Continuousness	Check continuous output does not cause any failure. And check temperature at each part of the supply. Test point: Shown in the table 9. Test instrument: Temperature logger	No failure for 4 hours or more at rated current. Increases of temperatures are allowable.	Confirmed.	O	-	good	See the table 9 in page 20.
	Electric power	Measure AC input voltage and AC input current.		Output 219.2V/1065A U-V 390V V-W 390V U-W 390V U 464A V 466A W 479A	O	-	good	
	Line regulation	Measure change of current or voltage with changing input voltage to ±10%. The method of measurement is same as one for stability.	≤ 10 ppm	≤ 10 ppm	O	-	good	See the table 6-8 and chart 3 in page 17-19.

Inspection report

Pr No.	A10611021

No.	Item	Method	Criterion	Result	Classification 1	Classification 2	Judgment	
	Repeatability	Set the current at rated current and then turn off excitation state once. After that, turn on excitation state again and compare the current at rated current with previous current. Test point: External DCCT or Shunt resistor Instrument: Voltage source and recorder	About 10ppm	6ppm	O	-	good	See the table 5 in 16 page
	Disconnection of input power	Turn on and off NFB several times manually.	No failure.	Confirmed.	O	-	good	
	Monitor	Measure each monitored value shown in page 6-9 at rated current.	(1)Error between the actual current and set value ≤ ±0.1% (2)Error between the actual current and monitored value: a. ≤ ±0.1% at digital signal with RS232C b. ≤ ±0.5% at display on the control panel c. ≤ ±0.1% at BNC connector	(1) 0.02% (2) a -0.01% b 0.01% c -0.01%	O	-	good	See the table 1-4 in 6-9 page

Inspection report

Pr No.	A10611021

No.	Item	Method	Criterion	Result	Classification		Judgment
					1	2	
	Voltage setting resolution	Measure change of voltage while increasing set value of voltage by the value shown on the criterion. Test point: Instrument: Voltage source and recorder			-	-	-
	Current setting resolution	Measure change of current while increasing set value of current by the value shown on the criterion. Test point: External DCCT Instruments: DMM	0.1A	0.1A	O	-	good

Inspection report

Table 1. Accuracy of setting current in LOCAL operation mode

Pr No.	A10611021

Set value(A)	Actual current (A)	Error (%)	Monitored value at display(A)	Error (%)	Monitored value at BNC(V)	Error (%)	Monitored value at ISO(V)	Error (%)	PLC input(V)	Error (%)
Test point (part No.) Level	External DCCT (—) 10V/ 2000A	——	On control panel (M2) 1100.0A/ 1100.0A	——	On control panel (BNC2) 10V/ 1500A	——	Terminal block (TB3-1,2) 10V/ 1500A	——	PLC slot 3 (F3AD04-0R IN1) 10V/ 1500A	——
0	0.0005	——	0.0	——	0.0001	——	0.0010	——	0.0000	——
110	109.84	-0.15	109.7	-0.13	0.7318	-0.06	0.7320	-0.04	0.7316	-0.09
220	219.88	-0.05	219.7	-0.08	1.4654	-0.03	1.4651	-0.05	1.4651	-0.05
330	329.90	-0.03	329.8	-0.03	2.1990	-0.02	2.1982	-0.05	2.1986	-0.03
440	439.96	-0.01	439.9	-0.01	2.9327	-0.01	2.9314	-0.06	2.9323	-0.03
550	549.98	-0.01	549.9	-0.01	3.6662	-0.01	3.6646	-0.05	3.6658	-0.02
660	660.02	0.01	659.9	-0.02	4.3998	-0.01	4.3980	-0.05	4.3993	-0.02
770	770.06	0.01	770.0	-0.01	5.1333	-0.01	5.1312	-0.05	5.1328	-0.02
880	880.12	0.01	880.1	-0.01	5.8670	-0.01	5.8646	-0.05	5.8665	-0.02
990	990.14	0.01	990.1	-0.01	6.6002	-0.01	6.5979	-0.05	6.5999	-0.02
1100	1100.18	0.02	1100.2	0.01	7.3339	-0.01	7.3317	-0.04	7.3335	-0.01

Allowable error

at rated current: ±0.1% ±0.5% ±0.5% (None) ±0.1%.

Note: Error of actual current is for the set value.
Other errors are for the actual current.

Instrument
・DCCT: T20-2000A (HITEC) [head: B/20 (HITEC)]
・DMM: 34401A (Agilent)

Inspection report

Table 2. Accuracy of monitoring output voltage

Pr No.	A10611021

——	Actual voltage (V)	Monitored value at display(V)	Error (%)	Monitored value at BNC(V)	Error (%)	Monitored value at ISO(V)	Error (%)	PLC input(V)	Error (%)
Test point (part No) Level	Output terminal (—) 250V/ 250V	On control panel (M1) 250.0V/ 250.0V	——	On control panel (BNC1) 10V/ 300V	——	Terminal block (TB3-4,5) 10V/ 300V	——	PLC slot 3 (F3AD04-0R IN2) 10V/ 300V	——
——	0.0	0.0	——	0.0	——	0.0	——	0.0	——
——	93.3	93.9	0.64	3.105	-0.16	3.101	-0.29	3.104	-0.19
——	188.8	189.4	0.32	6.297	0.06	6.294	0.01	6.306	0.20

Allowable errors are not specified.

Note: All errors are for the actual voltage.

Instrument
・DMM: 34401A (Agilent)

Inspection report

Table 3 Accuracy of setting current in LOCAL operation mode with spare PCB (PCB6)

Pr No.	A10611021

Set value(A)	Actual current (A)	Error (%)	Monitored value at display(A)	Error (%)	Monitored value at BNC(V)	Error (%)	Monitored value at ISO(V)	Error (%)	PLC input(V)	Error margin(%)
Test point (part No.) Level	External DCCT (—) 10V/ 2000A	——	On control panel (M2) 1100.0A/ 1100.0A	——	On control panel (BNC2) 10V/ 1500A	——	Terminal block (TB3-1,2) 10V/ 1500A	——	PLC slot 3 (F3AD04-0R IN1) 10V/ 1500A	——
0	0.0006	——	0.2	——	0.0008	——	0.0009	——	0.0007	——
110	109.84	-0.15	109.8	-0.04	0.7323	±0.01	0.7320	-0.04	0.7321	-0.02
220	219.88	-0.05	219.8	-0.04	1.4658	-0.01	1.4652	-0.05	1.4656	-0.02
330	329.92	-0.02	329.9	-0.01	2.1993	-0.01	2.1984	-0.05	2.1990	-0.02
440	439.96	-0.01	439.9	-0.01	2.9328	-0.01	2.9317	-0.05	2.9325	-0.02
550	549.96	-0.01	550.0	0.01	3.6662	-0.01	3.6650	-0.04	3.6659	-0.01
660	660.00	±0.01	660.0	±0.01	4.3997	-0.01	4.3984	-0.04	4.3993	-0.02
770	770.02	0.01	770.0	-0.01	5.1331	-0.01	5.1318	-0.03	5.1327	-0.01
880	880.08	0.01	880.1	0.01	5.8667	-0.01	5.8653	-0.03	5.8662	-0.02
990	990.10	0.01	990.1	±0.01	6.5999	-0.01	6.5987	-0.03	6.5995	-0.02
1100	1100.14	0.01	1100.1	-0.01	7.3335	-0.01	7.3325	-0.02	7.3329	-0.02

Allowable error:

at rated current: ±0.1% ±0.5% ±0.5% (None) ±0.1%.

Note: Error of actual current is for the set value.
Other errors are for the actual current.

Instrument
・DCCT: T20-2000A (HITEC) [head: B/20 (HITEC)]
・DMM: 34401A(Agilent)

Inspection report

Table 4. Accuracy of monitoring output voltage with spare PCB (PCB6)

Pr No.	A10611021

——	Actual voltage (V)	Monitored value at display(V)	Error (%)	Monitored value at BNC(V)	Error (%)	Monitored value at ISO(V)	Error (%)	PLC input(V)	Error (%)
Test point (part No) Level	Output terminal (—) 250V/ 250V	On control panel (M1) 250.0V/ 250.0V	——	On control panel (BNC1) 10V/ 300V	——	Terminal block (TB3-4, 5) 10V/ 300V	——	PLC slot 3 (F3AD04-0R IN2) 10V/ 300V	——
——	0.0	0.0	——	0.0	——	0.0	——	0.0	——
——	94.6	94.6	±0.01	3.1550	0.05	3.1534	±0.01	3.1546	0.04
——	191.0	191.6	0.31	6.369	0.04	6.373	0.10	6.383	0.26

Allowable errors are not specified.

Note: All errors are for the actual voltage.

Instrument
・DMM: 34401A (Agilent)

Inspection report

Programmed operation

Pr No.	A10611021

No.	Operation	Judgment	No.	Operation	Judgment
1	On start-up, operation mode is REMOTE and CURR REF INDICATOR indicates REMOTE set value.	good	8	Operation and display for major failure. Reset of interlock for major failure in LOCAL and REMOTE operation mode.	good
2	Switching operation mode (LOCAL/ REMOTE) and display for it.	good	9	Operation and display for minor failure. Reset of interlock for minor failure in LOCAL and REMOTE operation mode.	good
3	Turning excitation state ON and OFF and display for it in LOCAL operation mode	good	10	Interlocks are held in the EXCITATION ON state and not held in the EXCITATION OFF state.	good
4	Turning excitation state ON and OFF and display for it in REMOTE operation mode	good	11	Lighting of fault indication light in major and minor failure.	good
5	Setting current with CURRENT SET switch and SET switch. And its display.	good	12	Display of CURR REF INDICATOR. And switching of set value (REM/LOC) displayed on the indicator.	good
6	Zeroing current with CURRENT SET switch and ZERO SET switch. And its display.	good	13	Operation with LAMP TEST switch. Lighting of LEDs by the switch	good
7	Setting current in REMOTE operation mode.	good			

Inspection report

Programmed operation

Pr No.	A10611021

No.	Operation	Judgment	No.	Operation	Judgment
14	Switching output polarity manually	good			
15	Response from the supply to remote PC. a. LOCAL/ REMOTE b. READY/ MAJOR FAILURE/ MINOR FAILURE c. Output Current d. Polarity e. ID number (Factory setting is “0”)	good			
16	Switching NMR control ON/ OFF. (Factory setting is “OFF”) Operation and display in NMR CONTROL ON/ OFF	good			

Part details					1/2
TITLE POWER SCHEMATIC WIRING DIAGRAM (1/2)				Serial number	A10611021
				Date	5/7/2007
No	Sing	Name	Standard	Num.	Remarks
1	MCCB1	breaker	SX600 3P 600A	1	
2			AUX 1a1b		
3		handle	1519-9000	1	
4	MCCB2	breaker	F-30FB 3P 10A AUX1C	1	
5	MS1	magnetic switch	H600C-TK AC200V	1	
6			4a4b RC500A		
7	MC2	magnetic contactor	H65C AC200V	1	
8	L1	coil	0.3mH 1155A	1	
9	T1	transformer	P420,480 S 213.5V 944A	1	349.1kVA
10	T2	transformer	P420,480 S 200V 7A	1	2425VA
11	T3	transformer	P200 S 30V 0.2A	1	△－△ 18VA
12	T4	transformer	SD21-300A	1	
13	PF1-3	super rapid fuse	CS5F-1200-P	3	
14		microswitch	AHX2915	3	
15	SCR1-6	thyristor stack	SKT550U 6P 30W-KDO	1	CR1-6 attachment
16					
17	Df1	diode	PD2008	1	Parallel
18	CR7	power resistor	CRH100G150ΩJ	1	
19		film capacitor	105J1250	3	Parallel
20	R1-3	power resistor	CRH300V10ΩJOS	3	
21	R4	power resistor	CRH500V150ΩJOS	2	Series
22					
23	C1	aluminum electrolytic capacitor	HCGF6A2H822YF	20	Paralle 1500V8200μ
24	Cg	film capacitor	50V 0.1μF+0.33μF	6	Parallel
25	Rg	carbon film resistor	1/4W 470Ω	6	
26					
27	SA2	CR Absorber	CS-8	1	
28					
29					
30					
Rearks					
ＳＨ１					

Manufacturer	Charge	Approval			
Miyoshi	Miyoshi	Imai	KUDO.ELECTRIC.CO.,LTD	DWG.NO.	Ａ０３４Ｅ２０１Ａ

Part details					2/2
TITLE POWER SCHEMATIC WIRING DIAGRAM (1/2)				Serial number	A10611021
				Date	5/7/2007
No	Sing	Name	Standard	Num.	Remarks
1	FAN1-3	fan	VAS305 AN-42	3	
2		fan shutter	S30E	3	
3	FAN ALARM	fan alarm	FA-15 a ,DC24V	3	
4					
5	NF1	niose filter	MBS-1310-33	1	
6	NF2	niose filter	MBS-1310-33	1	
7					
8	PL1	combination display light	SLD48N-3TH2BRWS	1	
9	SWPS3	power supply	LDA50F-15-SN	1	+15V side
10	SWPS4	power supply	P15-15-N	1	-15V side
11	THS1-3	thermo switch	2455Series 150℃B	3	
12	THS4-6	thermo switch	5003F 120℃B	3	
13					
14	F1,2	fuse	AC250V 5A	2	
15	F3-5	fuse	AC250V 3A	3	
16	F6-8	fuse	AC250V 3A	3	
17		socket	FHC-15	8	
18					
19	AF1-3	alarm fuse	SP415L(1.5A)	3	
20		socket	P4-1S	3	
21					
22					
23					
24					
25					
26					
27					
28					
29					
30					
Rearks					
ＳＨ１					

Manufacturer	Charge	Approval			
Miyoshi	Miyoshi	Imai	KUDO.ELECTRIC.CO.,LTD	DWG.NO.	Ａ０３４Ｅ２０１Ａ

Part details					1/1
TITLE POWER SCHEMATIC WIRING DIAGRAM (2/2)				Serial number	A10611021
				Date	5/7/2007
No	Sing	Name	Standard	Num.	Remarks
1	Df2	diode	PD2008	1	Parallel
2	DCCT1	dcct	C20-3-1100(Bo)	1	
3					
4	RS	ultra precision power resistor	PCY2R0000D	1	
5					
6	AF4	alarm fuse	P403(0.3A)	1	
7		socket	P4-4S	1	
8					
9	SW1	polarity switch	612EH-2BD-2-HD	1	handle lever attachment
10					
11	PS1,2	power supply	GT2.5-24	2	24V1.5A
12	SMOKE	smoke detector	BGH45028K	1	
13		base	BGH4890	1	
14	R5	metal film resistor	1/2W 10kΩ	9	Series 90kΩ
15	R6	metal film resistor	1/2W 9.1kΩ	1	
16	R7	metal film resistor	1/2W 1.2kΩ	1	
17	R8	power resistor	CRH100V120ΩJ	1	
18	R9	metal film resistor	1/4W 20kΩ	2	Parallel
19	R10	metal film resistor	1/4W 10kΩ	2	Parallel
20	TB2	terminal stand	TS-100 2P	1	
21					
22	PDTr	transistor	2SC5359	1	
23	PR1	carbon film resistor	Z25C	1	
24	PR2	metal oxide film resistor	2W 2.2kΩ	1	
25					
26	F13	fuse	AFaC-3	1	
27					
28	C2	film capacitor	50V 0.047μF	1	
29	C3	electrolytic capacitor	450V 47μF	1	
30					
Rearks					
ＳＨ２					

Manufacturer	Charge	Approval			
Miyoshi	Miyoshi	Imai	KUDO.ELECTRIC.CO.,LTD	DWG.NO.	Ａ０３４Ｅ２０２Ａ

Part details

1/1

TITLE	PTr BANK	Serial number	A10611021
		Date	5/7/2007

No	Sing	Name	Standard	Num.	Remarks
1	DTr	transistor	2SC5359	12	
2	PTr1-14	transistor	2SC5359	168	
3	Rb1-14	carbon film resistor	1/2W 4.7Ω	168	
4	Re1-14	power resistor	10XXL 0.075ΩJ	168	
5	RDo	metal oxide film resistor	3W 0.47Ω	12	
6	Db1-14	diode	1SS133	168	
7	RDb	metal oxide film resistor	2W 47Ω	12	
8	RDd	carbon film resistor	1/2W 470Ω	12	
9	RDe	carbon film resistor	1/2W 220Ω	12	
10	CRB1-4	carbon film resistor	1/4W 220Ω	48	It is put four per one board.
11		film capacitor	50V 0.001μF	48	
12	THS	thermo switch	5003F 60℃B	6	
13	AFe1-14	alarm fuse	PL4100 (10A)	168	
14		socket	P4-2S	168	
15					
16	TB	terminal stand	ATK-10 4P	6	
17		board	KD0084A	12	
18					
19		Water-cooled board	240×455 t=3 Cu	6	
20					
21					
22					
23					
24					
25					
26					
27					
28					
29					
30					

Rearks

ＳＨ３

Manufacturer	Charge	Approval	KUDO.ELECTRIC.CO.,LTD		
Miyoshi	Miyoshi	Imai		DWG.NO.	Ａ０３４Ｅ２０３Ａ

Part details					1/3
TITLE	THYRISTOR GATE TRIGGER PCB KD1601 MASTER / KD1602 SLAVE			Serial number	A10611021
				Date	7/6/2007
No	Sing	Name	Standard	Num.	Remarks
1	C1	film capacitor	50V 0.01μF	1	
2	C2	film capacitor	50V 0.01μF	1	
3	C3	film capacitor	50V 0.047μF	1	
4	C4	film capacitor	50V 0.0068μF	1	
5	C5-8	film capacitor	50V 0.1μF	4	
6	C9	ceramic capacitor	50V 47pF	1	※
7	C10	film capacitor	50V 0.1μF	1	※
8	C11	film capacitor	50V 0.01μF	1	※
9	C12	film capacitor	50V 0.1μF	1	※
10	C13	film capacitor	50V 0.1μF	1	※
11	C14	electrolytic capacitor	50V 1μF	1	※
12	C15	electrolytic capacitor	50V 1μF	1	※
13	C16	film capacitor	50V 0.0047μF	1	
14	C17,18	film capacitor	50V 0.022μF	2	
15	C19	film capacitor	250V 1μF	1	
16	CP1,2	electrolytic capacitor	50V 22μF	2	
17	CP3	electrolytic capacitor	25V 47μF	1	
18	CP4,5	multilayer ceramic capacitor	50V 0.1μF	2	
19	CP6,7	multilayer ceramic capacitor	50V 0.1μF	2	
20	CP8,9	multilayer ceramic capacitor	50V 0.1μF	2	
21	C100	film capacitor	50V 0.0022μF	1	
22	D1-4	diode	1S1588	4	
23	D5-8	diode	1S955	4	
24	D9-13	diode	1S1588	5	※
25					
26	DZ1,2	zener diode	RD16EB	2	
27					
28	IC1	IC	555	1	
29	IC2	IC	TCA785	1	
30	IC3	C-MOS IC	4001	1	
31	IC4,5	OP.AMP	4558	2	※
32	IC6	OP.AMP	LF356	1	※
33	IC7	C-MOS IC	4011	1	※
Rearks	※ only PCB3				
ＳＨ４					

Manufacturer	Charge	Approval			
Miyoshi	Miyoshi	Imai	KUDO.ELECTRIC.CO.,LTD	DWG.NO.	Ａ０３４Ｅ２０４Ａ

Part details					2/3
TITLE	THYRISTOR GATE TRIGGER PCB KD1601 MASTER / KD1602 SLAVE			Serial number	A10611021
				Date	7/6/2007

No	Sing	Name	Standard	Num.	Remarks
1	R1	carbon film resistor	1/4W 100kΩ	1	
2	R2	carbon film resistor	1/4W 1kΩ	1	
3	R3	carbon film resistor	1/4W 6.8kΩ	1	
4	R4	carbon film resistor	1/4W 180kΩ	1	
5	R5,6	carbon film resistor	1/4W 10kΩ	2	
6	R7	metal film resistor	1/4W 51kΩ	1	
7	R8,9	metal film resistor	1/4W 180Ω	2	
8	R10,11	metal film resistor	1/4W 1kΩ	2	
9	R12,13	metal oxide film resistor	1W 1.5Ω	2	
10	R14-17	carbon film resistor	1/4W 2.2kΩ	4	
11	R18-21	metal oxide film resistor	2W 5.6Ω	4	
12	R22	carbon film resistor	1/4W 100kΩ	1	※
13	R23	metal film resistor	1/4W 1.8kΩ	1	※
14	R24	metal film resistor	1/4W 8.2kΩ	1	※
15	R25	metal film resistor	1/4W 20kΩ	1	※
16	R26	metal film resistor	1/4W 10kΩ	1	※
17	R27	metal film resistor	1/4W 5.6kΩ	1	※
18	R28	metal film resistor	1/4W 5.6kΩ	1	※
19	R29	metal film resistor	1/4W 2.7kΩ	1	※
20	R30,31	carbon film resistor	1/4W 22kΩ	2	※
21	R32	carbon film resistor	1/4W 10MΩ	1	※
22	R33	carbon film resistor	1/4W 5.6kΩ	1	※
23	R34				
24	R35	carbon film resistor	1/4W 10MΩ	1	※
25	R36	carbon film resistor	1/4W 100kΩ	1	※
26	R37	carbon film resistor	1/4W 47Ω	1	※
27	R38	metal film resistor	1/4W 10kΩ	1	※
28	R39	metal film resistor	1/4W 3.3kΩ	1	※
29					
30	TP1	check pin	LC-2-G-Yellow	1	
31	COM	check pin	LC-2-G-black	1	
32					
33					

Rearks ※ only PCB3

ＳＨ４

Manufacturer	Charge	Approval			
Miyoshi	Miyoshi	Imai	KUDO.ELECTRIC.CO.,LTD	DWG.NO.	Ａ０３４Ｅ２０４Ａ

Part details						3/3
TITLE	THYRISTOR GATE TRIGGER PCB KD1601 MASTER / KD1602 SLAVE			Serial number		A10611021
				Date		7/6/2007
No	Sing	Name	Standard		Num.	Remarks
1	R40	metal film resistor	1/4W 10kΩ	1	1	※
2	R41	carbon film resistor	1/4W 100Ω	1	1	※
3	R42	carbon film resistor	1/4W 68kΩ	1	1	※
4	R43	carbon film resistor	1/4W 180Ω	1	1	※
5	R44	carbon film resistor	1/4W 33kΩ	1	1	※
6	R45	carbon film resistor	1/4W 180Ω	1	1	※
7	R46	carbon film resistor	1/4W 100kΩ	1	1	※
8	R47	carbon film resistor	1/4W 51kΩ	1	1	※
9	R48	carbon film resistor	1/4W 12kΩ	1	1	※
10	R49	carbon film resistor	1/4W 68Ω	1	1	※
11	R50	carbon film resistor	1/4W 12kΩ	1	1	※
12	R51	carbon film resistor	1/4W 68Ω	1	1	※
13	R52,53	carbon film resistor	1/4W 180Ω	2	6	
14	R54	carbon film resistor	1/2W 470Ω	1	3	
15						
16	RV1	trimmer potentiometer	G12P 100kΩ	1	3	
17	RV2	trimmer potentiometer	G12P 50kΩ	1	3	
18						
19	RY1,2	relay	DS2E-M-DC12V	2	2	※
20						
21	T1,2	pulse transformer	SD-3512AP	2	6	
22						
23	Tr1,2	transistor	2SC3257	2	6	
24	Tr3,4	transistor	2SC1815	2	2	※
25						
26	L1	coil	HT-100A	3	9	
27						
28	TB	terminal stand	TS-125P 8P	1	3	
29						
30		board	KD1601	1	3	
31						
32						
33						
Rearks	※ only PCB3					
ＳＨ４						

Manufacturer	Charge	Approval			
Miyoshi	Miyoshi	Imai	KUDO.ELECTRIC.CO.,LTD	DWG.NO.	Ａ０３４Ｅ２０４Ａ

Part details					1/1
TITLE SEQUENCE WIRING DIAGRAM(1/9)				Serial number	A10611021
				Date	5/7/2007
No	Sing	Name	Standard	Num.	Remarks
1	NF3	noise filter	MAW-1205-22	1	
2	NF4	noise filter	MAW-1205-22	1	
3	SWPS5	power supply	P50-24-N	1	
4					
5	T5	transformer	KST-1803E	1	
6					
7	PLC	programmable logic controller	FA-M3/R		
8					
9		p.s module	F3PU20-0S	1	
10		CPU module	F3SP28-3S	1	
11		RS-232-C module	F3RZ81-0N	1	
12		analog input module	F3AD04-0R	1	
13		input module	F3XD64-3F	1	
14		output module 1	F3YD64-1P	1	
15		output module 2	F3YD32-1T	1	
16		output module 3	F3YC08-0C	1	
17		base module	F3BU09-0N	1	9slot
18		ROM pack	RK33-0N	1	
19					
20					
21					
22					
23					
24					
25					
26					
27					
28					
29					
30					
Rearks					
ＳＨ５					

Manufacturer	Charge	Approval			
Miyoshi	Miyoshi	Imai	KUDO.ELECTRIC.CO.,LTD	DWG.NO.	Ａ０３４Ｅ２０５Ａ

Part details					1/1
TITLE SEQUENCE WIRING DIAGRAM(2/9)				Serial number	A10611021
				Date	5/7/2007

No	Sing	Name	Standard	Num.	Remarks
1	CN	connecter	D-SUB 9P(M)	1set	
2					
3					
4					
5					
6					
7					
8					
9					
10					
11					
12					
13					
14					
15					
16					
17					
18					
19					
20					
21					
22					
23					
24					
25					
26					
27					
28					
29					
30					

Rearks

ＳＨ６

Manufacturer	Charge	Approval			
Miyoshi	Miyoshi	Imai	KUDO.ELECTRIC.CO.,LTD	DWG.NO.	Ａ０３４Ｅ２０６Ａ

Filing number 10/28

Part details					1/1
TITLE SEQUENCE WIRING DIAGRAM(3/9)				Serial number	A10611021
				Date	5/7/2007
No	Sing	Name	Standard	Num.	Remarks
1					
2					
3					
4					
5					
6					
7					
8					
9					
10					
11					
12					
13					
14					
15					
16					
17					
18					
19					
20					
21					
22					
23					
24					
25					
26					
27					
28					
29					
30					
Rearks					
ＳＨ７					

Manufacturer	Charge	Approval			
Miyoshi	Miyoshi	Imai	KUDO.ELECTRIC.CO.,LTD	DWG.NO.	Ａ０３４Ｅ２０７Ａ

Part details					1/1
TITLE SEQUENCE WIRING DIAGRAM(4/9)				Serial number	A10611021
				Date	5/7/2007
No	Sing	Name	Standard	Num.	Remarks
1	D.SW	rotary switch	A7PS-206-S01-1	1	
2		rotary switch	A7PS-206-1	4	
3		rotary switch	A7P-PU-1	1	
4		rotary switch	A7P-M-1	1set	
5		rotary switch	NRT-C	5	
6					
7					
8					
9					
10					
11					
12					
13					
14					
15					
16					
17					
18					
19					
20					
21					
22					
23					
24					
25					
26					
27					
28					
29					
30					
Rearks					
ＳＨ８					

Manufacturer	Charge	Approval			
Miyoshi	Miyoshi	Imai	KUDO.ELECTRIC.CO.,LTD	DWG.NO.	Ａ０３４Ｅ２０８Ａ

Part details					1/1
TITLE SEQUENCE WIRING DIAGRAM(5/9)				Serial number	A10611021
				Date	5/7/2007
No	Sing	Name	Standard	Num.	Remarks
1	S1-5	switch	MC3D-M20FB	5	
2	S7-8	switch	MC3D-M20FB	2	
3	S9,10	switch	AL8Q-M11Y	2	
4			lens color is White.		
5	S11	switch	XW1E-BV411MFR	1	
6		cover	HW9Z-KL1	1	
7	K4-9	relay	HC4-H DC24V	6	
8		socket	HC4-SFD-K	6	
9					
10	K4D-K9D	diode	1S1887	6	
11					
12	F.SW	flow switch	BN-1311-25A	1	
13					
14	TB3	terminal stand	ATL-10 18P	1	
15					
16	DOOR.SW	switch	1VAP-2-1	6	
17					
18					
19					
20					
21					
22					
23					
24					
25					
26					
27					
28					
29					
30					
Rearks					
ＳＨ９					

Manufacturer	Charge	Approval			
Miyoshi	Miyoshi	Imai	KUDO.ELECTRIC.CO.,LTD	DWG.NO.	Ａ０３４Ｅ２０９Ａ

Part details					1/1
TITLE SEQUENCE WIRING DIAGRAM(6/9)				Serial number	A10611021
				Date	5/7/2007
No	Sing	Name	Standard	Num.	Remarks
1	LED1	LED	LFTD-2Y	1	REMOTE
2	LED2	LED	LFTD-2Y	1	LOCAL
3	LED3	LED	LFTD-2R	1	ON
4	LED4	LED	LFTD-2G	1	OFF
5	LED5	LED	(With built-in S9)	1	REM.
6	LED6	LED	(With built-in S10)	1	LOC.
7	LED7	LED	(With built-in S11)	1	EMERGENCY STOP
8		switch cover	MC9Z-PA3C PN05	1	
9		switch cover	MC9Z-PA3G PN05	1	
10		switch cover	MC9Z-PA3R PN05	1	
11					
12					
13					
14					
15					
16	LED21-34	LED	DB24-89-R	14	
17					
18					
19					
20	LED35	LED	AP1M 122G	1	POLARITY +
21	LED36	LED	AP1M 122G	1	POLARITY -
22	LED37	LED	AP1M 122G	1	NMR CONTROL
23	LED38	LED	APS122DNR	1	FAULT
24	S6	switch	MC3D-M20FB	1	
25					
26	D1-7	diode	1S1887	7	
27	D21-38	diode	1S1887	18	
28					
29	LEDR1,2	metal oxide film resistor	1W 2.2kΩ	2	
30					
Rearks					
ＳＨ１０					

Manufacturer	Charge	Approval			
Miyoshi	Miyoshi	Imai	KUDO.ELECTRIC.CO.,LTD	DWG.NO.	Ａ０３４Ｅ２１０Ａ

Part details					1/1
TITLE SEQUENCE WIRING DIAGRAM(7/9)				Serial number	A10611021
				Date	5/7/2007

No	Sing	Name	Standard	Num.	Remarks
1	T6	transformer	KST-1803E	1	
2	F10	fuse	AC250V 1A	1	
3		socket	FHC-15	1	
4					
5					
6					
7					
8					
9					
10					
11					
12					
13					
14					
15					
16					
17					
18					
19					
20					
21					
22					
23					
24					
25					
26					
27					
28					
29					
30					

Rearks

ＳＨ１１

Manufacturer	Charge	Approval			
Miyoshi	Miyoshi	Imai	KUDO.ELECTRIC.CO.,LTD	DWG.NO.	Ａ０３４Ｅ２１１Ａ

Filing number 15/28

Part details					1/1
TITLE SEQUENCE WIRING DIAGRAM(8/9)				Serial number	A10611021
				Date	5/7/2007
No	Sing	Name	Standard	Num.	Remarks
1	M3	BCD remote indicator	AI-406-11	1	
2					
3					
4					
5					
6					
7					
8					
9					
10					
11					
12					
13					
14					
15					
16					
17					
18					
19					
20					
21					
22					
23					
24					
25					
26					
27					
28					
29					
30					
Rearks					
ＳＨ１２					

Manufacturer	Charge	Approval			
Miyoshi	Miyoshi	Imai	KUDO.ELECTRIC.CO.,LTD	DWG.NO.	Ａ０３４Ｅ２１２Ａ

Part details					1/1
TITLE SEQUENCE WIRING DIAGRAM(9/9)				Serial number	A10611021
				Date	5/7/2007
No	Sing	Name	Standard	Num.	Remarks
1	K1,2	relay	HC2-H DC24V	2	
2		socket	HC2-SFD-K	2	
3	K3	relay	HC4-H DC24V	1	
4		socket	HC4-SFD-K	1	
5					
6	K1D-K3D	diode	1S1887	3	
7					
8					
9					
10					
11					
12					
13					
14					
15					
16					
17					
18					
19					
20					
21					
22					
23					
24					
25					
26					
27					
28					
29					
30					
Rearks					
ＳＨ１３					

Manufacturer	Charge	Approval			
Miyoshi	Miyoshi	Imai	KUDO.ELECTRIC.CO.,LTD	DWG.NO.	Ａ０３４Ｅ２１３Ａ

Filing number 17/28

Part details					1/1
TITLE	BOARD WIRING DIAGRAM			Serial number	A10611021
				Date	5/7/2007
No	Sing	Name	Standard	Num.	Remarks
1	M1	digital panel meter	AP-242A-13-3	1	
2	M2	digital panel meter	AP-242A-13-2	1	
3					
4	BNC1,2	BNC connecter	31-10	2	
5					
6	T7	transformer	KST-1803E	1	
7	F11	fuse	AC250V 1A	1	
8		socket	FHC-15	1	
9					
10					
11					
12					
13					
14					
15					
16					
17					
18					
19					
20					
21					
22					
23					
24					
25					
26					
27					
28					
29					
30					
Rearks					
ＳＨ１４					

Manufacturer	Charge	Approval			
Miyoshi	Miyoshi	Imai	KUDO.ELECTRIC.CO.,LTD	DWG.NO.	Ａ０３４Ｅ２１４Ａ

Part details					1/1
TITLE CONSTANT TEMPERATURE BOX CONNECTION CHART				Serial number	A10611021
				Date	5/7/2007
No	Sing	Name	Standard	Num.	Remarks
1	SC1	thermocontroller	SL-C7P1206M	1	
2	SC2	element	OCE-F15P-D12	1	
3	SC3	temp sensor	OCE-TCPT14	1	
4					
5					
6	T8	transformer	SD21-500A	1	
7	F12	fuse	AC250V 5A	1	
8		socket	FHC-15	1	
9					
10					
11					
12					
13					
14					
15					
16					
17					
18					
19					
20					
21					
22					
23					
24					
25					
26					
27					
28					
29					
30					

Rearks

ＳＨ１５

Manufacturer	Charge	Approval			
Miyoshi	Miyoshi	Imai	KUDO.ELECTRIC.CO.,LTD	DWG.NO.	Ａ０３４Ｅ２１５Ａ

Part details					1/2
TITLE	D/A CONVERTER PCB KD7509			Serial number	A10611021
				Date	7/6/2007
No	Sing	Name	Standard	Num.	Remarks
1	DB1-3	diode network	W02	3	
2	IC1	voltage regulator	TA7805S	1	
3	IC2	voltage regulator	TA7815S	1	
4	IC3	voltage regulator	TA79015S	1	
5	IC4	op.amp	OP177FP	1	
6	IC5	voltage source	AD588BQ	1	
7	IC6	TTL	74LS14	1	
8	IC7	D/A converter	AD7846KN	1	
9					
10	PC1-17	photocoupler	TLP551	17	
11	D1-19	diode	1SS133	19	
12	RV1	trimmer potentiometer	CT-94X 100kΩ	0	
13	RV2	trimmer potentiometer	CT-94X 10kΩ	0	
14	RV3	trimmer potentiometer	CT-94W 10kΩ	0	
15					
16	RA1-17	correctohm	RKC4SD561J	17	560ΩJ
17	RA18,19	correctohm	RKC8BD222J	2	2.2kΩJ
18					
19	R1	metal film resistor	MF1/4CC 2201F	1	2.2kΩ
20	R2	metal film resistor	MF1/4CC 51R0F	1	51Ω
21	R3	metal film resistor	MF1/4CC 5101F	0	5.1kΩ
22	R4	metal film resistor	MF1/4CC 4702F	1	47kΩ
23	R5	metal film resistor	MF1/4CC 1001F	1	1kΩ
24	R6	metal film resistor	MF1/4CC 3902F	0	39kΩ
25					
26	ZD1	zener diode	RD12EB	1	
27	FIN1-3	heat sink	T220N(19)L=25	3	IC1-3
28	JP1-20,24	0Ω resistance	Z25C	23	
29					
30					
Rearks					
ＳＨ１７					

Manufacturer	Charge	Approval			
Miyoshi	Miyoshi	Imai	KUDO.ELECTRIC.CO.,LTD	DWG.NO.	Ａ０３４Ｅ２１７Ａ

Part details					2/2
TITLE	D/A CONVERTER PCB KD7509			Serial number	A10611021
				Date	5/7/2007
No	Sing	Name	Standard	Num.	Remarks
1	C1-16	film capacitor	FCQ92500U222KVAVZ0	16	50V 0.0022μF
2	C17	film capacitor	FCQ92500U103KVAVZ0	1	50V 0.01μF
3	C18-20	electrolytic capacitor	EKMG500ELL471MK20S	3	50V 470μF
4	C21-23	electrolytic capacitor	EKMG500ELL470MF11D	3	50V 47μF
5	C24	electrolytic capacitor	EKMG500ELL220ME11D	1	50V 22μF
6	C25-27	film capacitor	FCQ92500U104KAAAZ0	3	50V 0.1μF
7	C28	electrolytic capacitor	EKMG500ELL470MF11D	1	50V 47μF
8	C29,30	electrolytic capacitor	EKMG500ELL100ME11D	2	50V 10μF
9	C31	multilayer seramic capacitor	REPF11H104Z2K1A01B	1	50V 0.1μ
10	C33	film capacitor	FDTDZ500U105KAAAZ0	1	50V 1μF
11	C34-36	multilayer seramic capacitor	REPF11H104Z2K1A01B	3	50V 0.1μF
12	C37	electrolytic capacitor	EKMG500ELL470MF11D	1	50V 47μF
13	C38	film capacitor	FCQ92500U104KAAAZ0	1	50V 0.1μF
14	C39	multilayer seramic capacitor	REPF11H104Z2K1A01B	1	50V 0.1μF
15					
16	CN1	connecter	PS-40PE-D4T2-M1E	1	
17		connecter	PS-40SM-D4P1-1C	1	
18		connecter	PS-SR40M2	1	
19					
20	CN2	connecter	1150N-044-009	1	
21					
22	CP1-3	check pin	LC-3-G-Yellow	3	
23	CP4,8	check pin	LC-3-G-black	2	
24	CP5-7	check pin	LC-3-G-Yellow	3	
25					
26		board	KD7509	1	
27					
28					
29					
30					
Rearks					
ＳＨ１７					

Manufacturer	Charge	Approval			
Miyoshi	Miyoshi	Imai	KUDO.ELECTRIC.CO.,LTD	DWG.NO.	Ａ０３４Ｅ２１７Ａ

Part details					1/3
TITLE	ADDITION MONITOR PCB			Serial number	A10611021
				Date	5/7/2007
No	Sing	Name	Standard	Num.	Remarks
1	IC1-3	OP.AMP	OP177-FP	3	
2	IC4	Difference Amplifier	INA132PA	1	
3	IC5-12	OP.AMP	OP177-GP	8	
4					
5	K1	relay	DS1E-M DC12V	1	
6	K2	relay	DS1E-M DC12V	1	
7					
8	D1-9	diode	1S953	9	
9	D10	diode	1S953	1	
10					
11	VR1	trimmer potentiometer	GF06P 1kΩ	1	
12	VR2	trimmer potentiometer	GF06P 2kΩ	1	
13	VR3	trimmer potentiometer	GF06P 20kΩ	1	
14	VR4	trimmer potentiometer	GF06P 2kΩ	1	
15	VR5	trimmer potentiometer	GF06P 20kΩ	1	
16	VR6	trimmer potentiometer	GF06P 2kΩ	1	
17	VR7	trimmer potentiometer	GF06P 20kΩ	1	
18	VR8	trimmer potentiometer	GF06P 2kΩ	1	
19	VR9	trimmer potentiometer	GF06P 20kΩ	1	
20	VR10	trimmer potentiometer	GF06P 2kΩ	1	
21	VR11	trimmer potentiometer	GF06P 20kΩ	1	
22	VR12	trimmer potentiometer	GF06P 2kΩ	1	
23					
24					
25					
26					
27					
28					
29					
30					
Rearks					
ＳＨ１８					

Manufacturer	Charge	Approval			
Miyoshi	Miyoshi	Imai	KUDO.ELECTRIC.CO.,LTD	DWG.NO.	Ａ０３４Ｅ２１８Ａ

Part details					2/3
TITLE ADDITION MONITOR PCB				Serial number	A10611021
				Date	5/7/2007
No	Sing	Name	Standard	Num.	Remarks
1	R1	ultra precision resistor	MCZ 10K000D	1	
2	R2	ultra precision resistor	MCZ 10K000D	1	
3	R3	metal film resistor	1/4W 51Ω	1	
4	R4	metal film resistor	1/4W 91Ω	1	
5	R5	metal film resistor	1/4W 100kΩ	1	
6	R6	metal film resistor	1/4W 100kΩ	1	
7	R7	metal film resistor	1/4W 100kΩ	1	
8	R8	metal film resistor	1/4W 100kΩ	1	
9	R9	metal film resistor	1/4W 20kΩ	1	
10	R10	metal film resistor	1/4W 10kΩ	1	
11	R11	ultra precision resistor	MCZ 1K8000D	1	
12	R12	ultra precision resistor	MCZ 1K8000D	1	
13	R13	ultra precision resistor	MCZ 9K0000D	1	
14	R14	ultra precision resistor	MCZ 9K0000D	1	
15	R15	metal film resistor	1/4W 15kΩ	1	
16	R16	metal film resistor	1/4W 10kΩ	1	
17	R17	metal film resistor	1/4W 6.2kΩ	1	
18	R18	metal film resistor	1/4W 51Ω	1	
19	R19	metal film resistor	1/4W 100kΩ	1	
20	R20	metal film resistor	1/4W 10kΩ	1	
21	R21	metal film resistor	1/4W 10kΩ	1	
22	R22	metal film resistor	1/4W 51Ω	1	
23	R23	metal film resistor	1/4W 15kΩ	1	
24	R24	metal film resistor	1/4W 10kΩ	1	
25	R25	metal film resistor	1/4W 6.2kΩ	1	
26	R26	metal film resistor	1/4W 51Ω	1	
27	R27	metal film resistor	1/4W 10kΩ	1	
28	R28	metal film resistor	1/4W 10kΩ	1	
29	R29	metal film resistor	1/4W 9.1kΩ	1	
30	R30	metal film resistor	1/4W 18kΩ	1	
Rearks					
ＳＨ１８					

Manufacturer	Charge	Approval			
Miyoshi	Miyoshi	Imai	KUDO.ELECTRIC.CO.,LTD	DWG.NO.	Ａ０３４Ｅ２１８Ａ

Filing number 23/28

Part details					3/3
TITLE	ADDITION MONITOR PCB			Serial number	A10611021
				Date	5/7/2007
No	Sing	Name	Standard	Num.	Remarks
1	R31	metal film resistor	1/4W 51Ω	1	
2	R32	metal film resistor	1/4W 3.9kΩ	1	
3	R33	metal film resistor	1/4W 10kΩ	1	
4	R34	metal film resistor	1/4W 9.1kΩ	1	
5	R35	metal film resistor	1/4W 18kΩ	1	
6	R36	metal film resistor	1/4W 51Ω	1	
7	R37	metal film resistor	1/4W 10kΩ	1	
8	R38	metal film resistor	1/4W 10kΩ	1	
9	R39	metal film resistor	1/4W 10MΩ	1	
10	R40	metal film resistor	1/4W 12kΩ	1	
11	R41	metal film resistor	1/4W 4.7kΩ	1	
12	R42	metal film resistor	1/4W 10MΩ	1	
13	R43	metal film resistor	1/4W 51Ω	1	
14	R44	metal film resistor	1/4W 91Ω	1	
15	R45,46	metal film resistor	1/4W 2MΩ	4	Series(4MΩ)
16	C1,2	film capacitor	50V 0.1μF	2	
17	C3,4	electrolytic capacitor	50V 47μF	2	
18	C5	film capacitor	50V 0.1μF	1	
19	C6,7	film capacitor	50V 0.1μF	2	
20	C8	film capacitor	50V 2.2μF	1	
21	C9-11	film capacitor	50V 0.1μF	3	
22	CC	multilayer ceramic capacitor	50V 0.1μF	20	
23					
24		board	CPU-101	1	
25					
26					
27					
28					
29					
30					
Rearks					
ＳＨ１８					

Manufacturer	Charge	Approval			
Miyoshi	Miyoshi	Imai	KUDO.ELECTRIC.CO.,LTD	DWG.NO.	Ａ０３４Ｅ２１８Ａ

Part details					1/2
TITLE		ERROR AMP PCB KD2021A		Serial number	A10611021
				Date	5/7/2007
No	Sing	Name	Standard	Num.	Remarks
1	DB1	diode network	W02	1	
2	IC1	voltage regulator	7815	1	
3	IC2	voltage regulator	7915	1	
4	IC4	op.amp	OP177-GP	1	
5	IC5	op.amp	4558	1	
6	FIN1,2	heat sink	IC-2425-ST	2	IC1,2
7					
8	TR1	transistor	2SC1815	1	
9	PO1	photocoupler	PC817	1	
10	D2	diode	1S1588	1	
11					
12	RV4	trimmer poteniometer	G12P 50kΩ	1	
13	RV5	trimmer poteniometer	G12P 5kΩ	1	
14	R0	metal film resistor	1/4W 4.7MΩ	1	
15	R4	metal film resistor	1/4W 20kΩ	1	
16	R5	metal film resistor	1/4W 4.7kΩ	1	
17	R6	metal film resistor	1/4W 4.7kΩ	1	
18	R7	metal film resistor	1/4W 1kΩ	1	
19	R8	metal film resistor	1/4W 330Ω	1	
20	R9	metal film resistor	1/4W 10kΩ	1	
21	R10	metal oxide film resistor	3W 39Ω	1	
22	R17	metal film resistor	1/4W 4.7kΩ	1	
23	R18	metal film resistor	1/4W 12kΩ	1	
24	R19	metal film resistor	1/4W 4.7kΩ	1	
25	R20	metal film resistor	1/4W 2.2MΩ	1	
26	R21	metal film resistor	1/2W 1.5kΩ	1	
27	R100	metal film resistor	1/4W 1MΩ	1	
28	R13	metal film resistor	1/4W 1MΩ	1	
29					
30					

Rearks

ＳＨ１９

Manufacturer	Charge	Approval			
Miyoshi	Miyoshi	Imai	KUDO.ELECTRIC.CO.,LTD	DWG.NO.	Ａ０３４Ｅ２１９Ａ

Part details					2/2
TITLE		ERROR AMP PCB KD2021A		Serial number	A10611021
				Date	5/7/2007
No	Sing	Name	Standard	Num.	Remarks
1	C1,2	electrolytic capacitor	50V 1000μF	2	
2	C4,5	electrolytic capacitor	50V 47μF	2	
3	C6,7	film capacitor	50V 0.1μF	2	
4	C9	film capacitor	50V 0.33μF	1	
5					
6					
7					
8	SIG.COM	check pin	LC-2G black	1	
9	POW.COM	check pin	LC-3G black	1	
10	CP1-4	check pin	LC-2G Yellow	4	
11					
12					
13		board	KD2021A	1	
14					
15					
16					
17					
18					
19					
20					
21					
22					
23					
24					
25					
26					
27					
28					
29					
30					
Rearks					
ＳＨ１９					

Manufacturer	Charge	Approval			
Miyoshi	Miyoshi	Imai	KUDO.ELECTRIC.CO.,LTD	DWG.NO.	Ａ０３４Ｅ２１９Ａ

Part details					1/1
TITLE	EARTH FAULT DETECTION PCB			Serial number	A10611021
				Date	23/1/2007
No	Sing	Name	Standard	Num.	Remarks
1	DCCT1	dcct	HPS-01-AP	1	±4V/±100mA
2					
3	IC1	op.amp	OP177-GP	1	
4					
5	D2,3	diode	1SS133	2	
6	Tr1	transistor	2SC1815Y	1	
7					
8	R1	metal film resistor	MF1/4CC 1002F	1	1/4W 10kΩ
9	R2	metal film resistor	MF1/4CC 1302F	1	1/4W 13kΩ
10	R3	metal film resistor	MF1/4CC 1001F	1	1/4W 1kΩ
11	R4	metal film resistor	MF1/4CC 1002F	1	1/4W 10kΩ
12	R5	metal film resistor	MF1/4CC 1002F	1	1/4W 10kΩ
13	R6	carbon film resistor	CF1/4C 472J	1	1/4W 4.7kΩ
14	R7	carbon film resistor	CF1/4C 910J	1	1/4W 91Ω
15	R8	metal film resistor	MF1/4CC 1002F	1	1/4W 10kΩ
16	RV1	trimmer potentiometer	G12P 1kΩ	1	
17					
18	C1	electrolytic capacitor	ESMG250ELL470ME11D	1	25V/47uF
19	C2	electrolytic capacitor	ESMG250ELL470ME11D	1	25V/47uF
20	C3	film capacitor	FCQ92500U104KAAAZ0	1	50V/0.1uF
21	C4	film capacitor	FCQ92500U104KAAAZ0	1	50V/0.1uF
22	C5	electrolytic capacitor	ESMG250ELL100ME11D	1	25V/10uF
23	C6	film capacitor	FCQ92500U103KVAVZ0	1	50V/0.01uF
24	C7	film capacitor	FCQ92500U102KVAVZ0	1	50V/0.001uF
25	C8	multilayer ceramic capacitor	RPEF11H104Z2K1A01B	1	50V/0.1uF
26					
27	K1	relay	DS1E-M-DC12V	1	
28					
29	—	board	CPU-101	1	
30	—	connecter	1150N-044-009	1	
Rearks					
ＳＨ２０					

Manufacturer	Charge	Approval			
Miyoshi	Miyoshi	Imai	KUDO.ELECTRIC.CO.,LTD	DWG.NO.	Ａ０３４Ｅ２２０Ａ

Part details					1/2
TITLE	ISO.AMP PCB			Serial number	A10611021
				Date	24/1/2007
No	Sing	Name	Standard	Num.	Remarks
1	IC1,2	iso.amp	AD210AN	2	
2	IC3,4	op.amp	OP07EP	2	
3					
4	R1	metal film resistor	MF1/4CC 1002F	1	1/4W 10kΩ
5	R2	metal film resistor	MF1/4CC 1002F	1	1/4W 10kΩ
6	R3	metal film resistor	MF1/4CC 9101F	1	1/4W 9.1kΩ
7	R4	metal film resistor	MF1/4CC 1002F	1	1/4W 10kΩ
8	R5	metal film resistor	MF1/4CC 1003F	1	1/4W 100kΩ
9	R6	metal film resistor	MF1/4CC 1003F	1	1/4W 100kΩ
10	R7	metal film resistor	MF1/4CC 51R0F	1	1/4W 51Ω
11	R8	metal film resistor	MF1/4CC 1004F	1	1/4W 1MΩ
12	R9	metal film resistor	MF1/4CC 1002F	1	1/4W 10kΩ
13	R10	metal film resistor	MF1/4CC 1002F	1	1/4W 10kΩ
14	R11	metal film resistor	MF1/4CC 9101F	1	1/4W 9.1kΩ
15	R12	metal film resistor	MF1/4CC 1002F	1	1/4W 10kΩ
16	R13	metal film resistor	MF1/4CC 1003F	1	1/4W 100kΩ
17	R14	metal film resistor	MF1/4CC 1003F	1	1/4W 100kΩ
18	R15	metal film resistor	MF1/4CC 51R0F	1	1/4W 51Ω
19	R16	metal film resistor	MF1/4CC 1004F	1	1/4W 1MΩ
20					
21					
22	RV1	trimmer potentiometer	G12P 2kΩ	1	
23	RV2	trimmer potentiometer	G12P 100kΩ	1	
24	RV3	trimmer potentiometer	G12P 2kΩ	1	
25	RV4	trimmer potentiometer	G12P 100kΩ	1	
26					
27					
28					
29					
30					

Rearks

ＳＨ２２

Manufacturer	Charge	Approval			
Miyoshi	Miyoshi	Imai	KUDO.ELECTRIC.CO.,LTD	DWG.NO.	Ａ０３４Ｅ２２２Ａ

Part details					2/2
TITLE	ISO.AMP PCB			Serial number	A10611021
				Date	24/1/2007
No	Sing	Name	Standard	Num.	Remarks
1	C1	electolytic capacitor	ESMG250ELL470ME11D	1	25V/47uF
2	C2	film capacitor	FCQ92500U104KAAAZ0	1	50V/0.1uF
3	C3	film capacitor	FCQ92500U104KAAAZ0	1	50V/0.1uF
4	C4	film capacitor	FCQ92500U104KAAAZ0	1	50V/0.1uF
5	C5	film capacitor	FCQ92500U222KVAVZ0	1	50V/0.0022uF
6	C6	film capacitor	FCQ92500U102KVAVZ0	1	50V/0.001uF
7	C7	film capacitor	FCQ92500U104KAAAZ0	1	50V/0.1uF
8	C8	film capacitor	FCQ92500U104KAAAZ0	1	50V/0.1uF
9	C9	film capacitor	FCQ92500U104KAAAZ0	1	50V/0.1uF
10	C10	film capacitor	FCQ92500U104KAAAZ0	1	50V/0.1uF
11	C11	film capacitor	FCQ92500U222KVAVZ0	1	50V/0.0022uF
12	C12	film capacitor	FCQ92500U102KVAVZ0	1	50V/0.001uF
13	C13	film capacitor	FCQ92500U104KAAAZ0	1	50V/0.1uF
14	C14	film capacitor	FCQ92500U104KAAAZ0	1	50V/0.1uF
15					
16					
17	—	board	CPU-101	1	
18					
19	—	connecter	1150N-044-009	1	
20					
21					
22					
23					
24					
25					
26					
27					
28					
29					
30					
Rearks					
ＳＨ２２					

Manufacturer	Charge	Approval			
Miyoshi	Miyoshi	Imai	KUDO.ELECTRIC.CO.,LTD	DWG.NO.	Ａ０３４Ｅ２２２Ａ