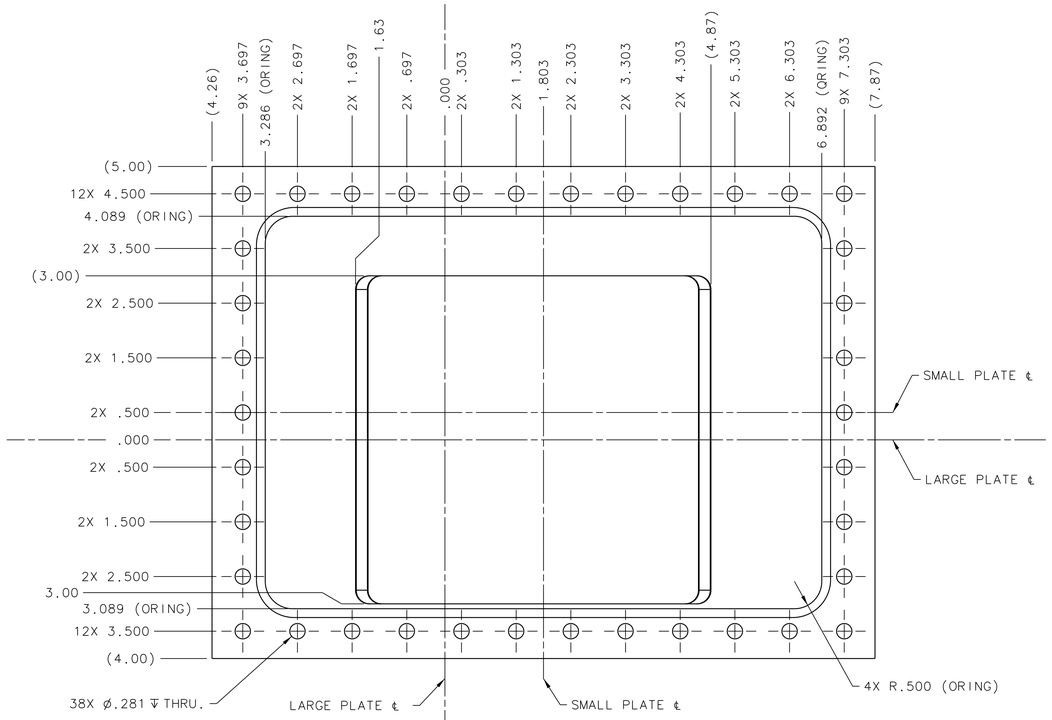

DETAIL A
SCALE 1:1

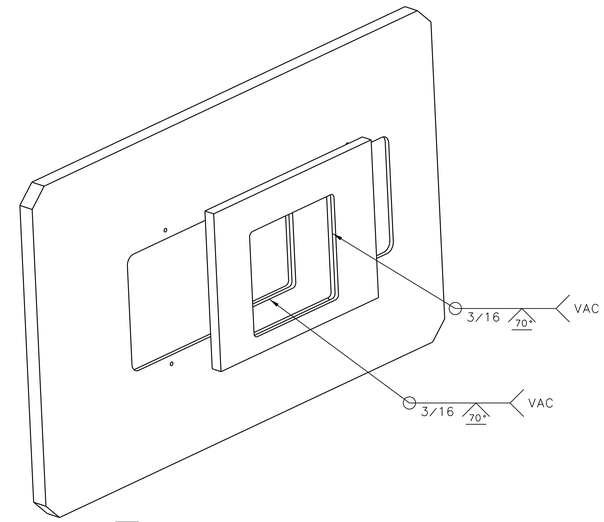

4 5 WELD BEFORE FINAL MACHINING

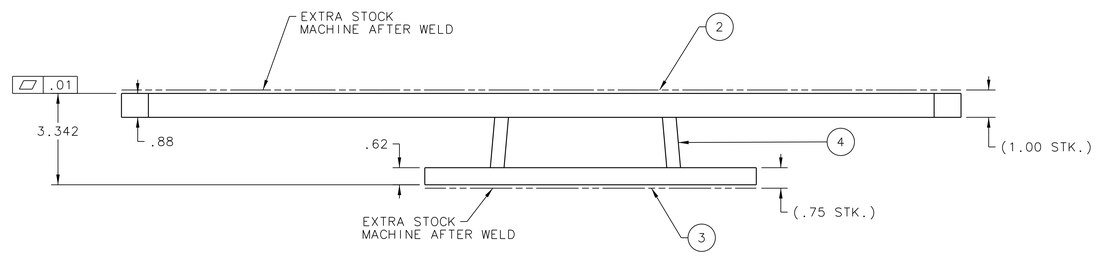

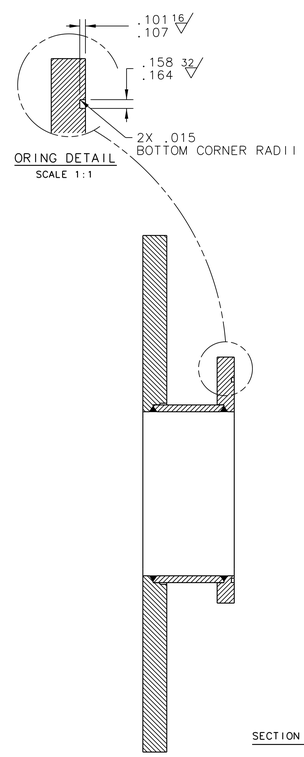

ORING DETAIL
SCALE 1:1

SECTION B-B

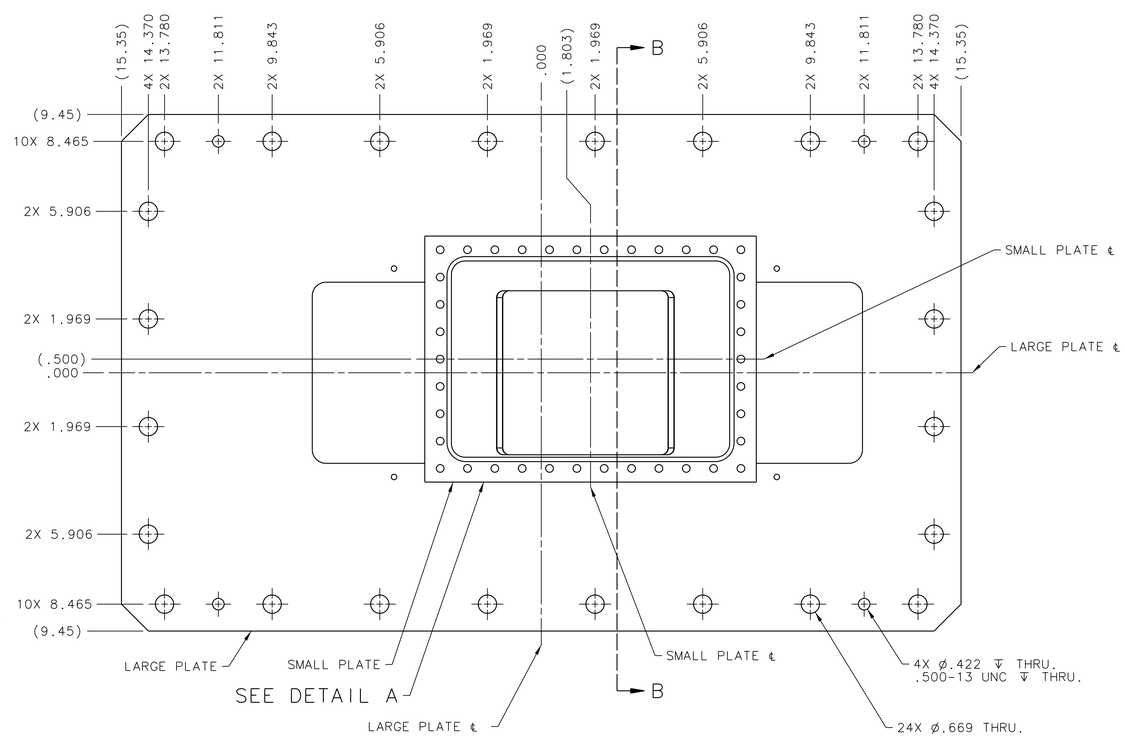

-01 SPL TO HKS SIV ADAPTER WELDMENT

DOCUMENT CONTROL STAMP	SIZE	DWG. NO.	REV.
	E	67505-E-00015	–
	SCALE 1:2	USED ON ASSY NO. -	SHEET 2 OF 3