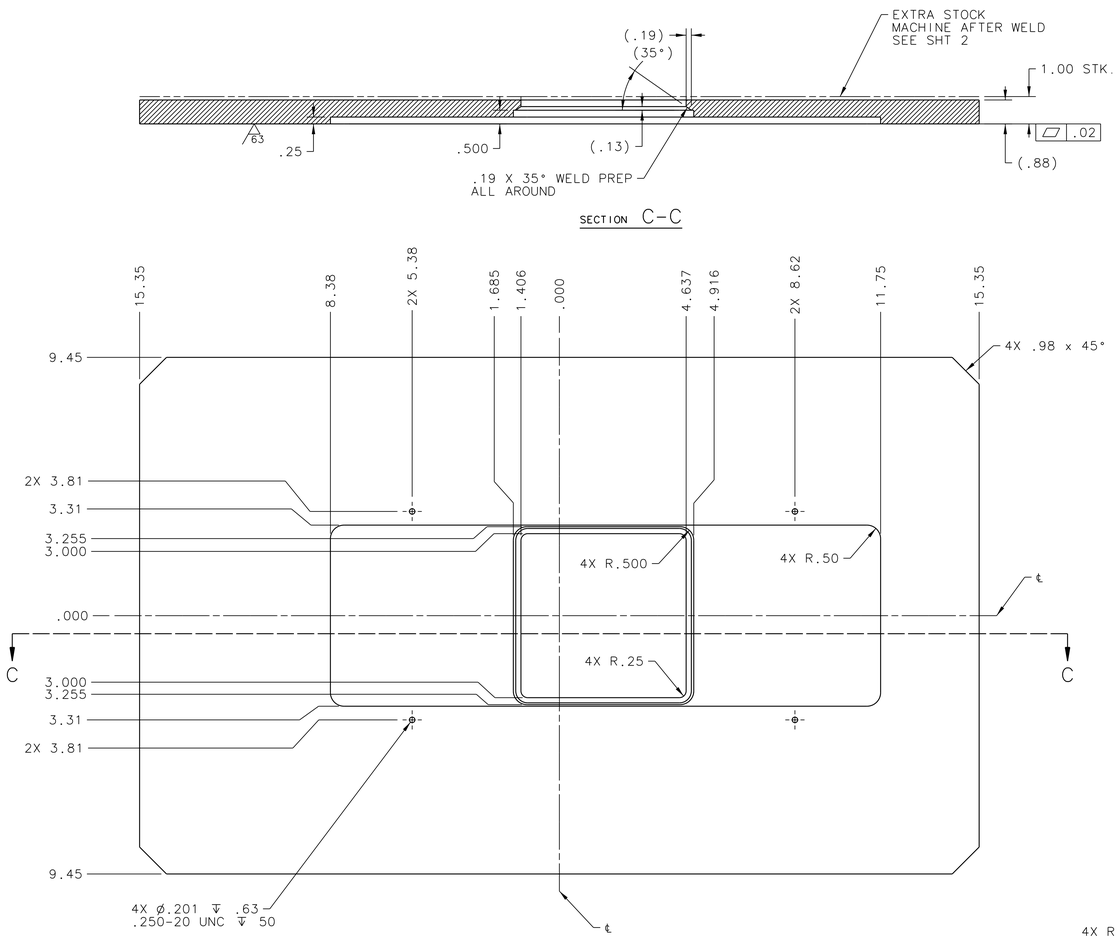

-02 LARGE PLATE
(MACHINE BEFORE WELD)

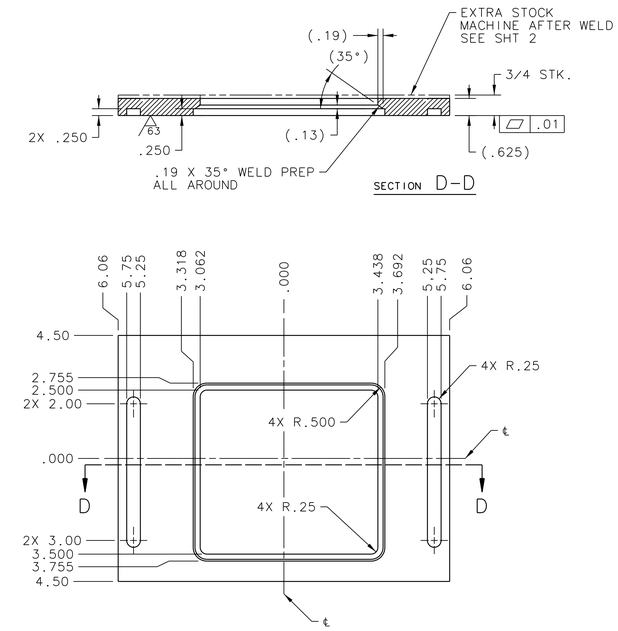

-03 SMALL PLATE
(MACHINE BEFORE WELD)

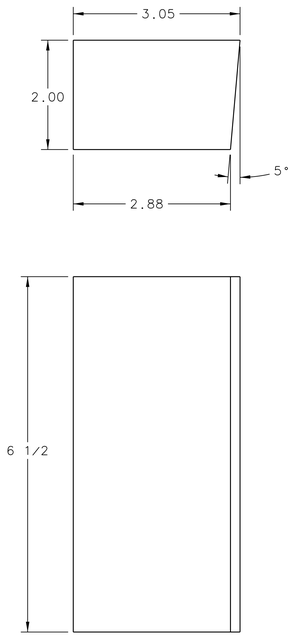

-06 HM BLOCK
SCALE 1:1

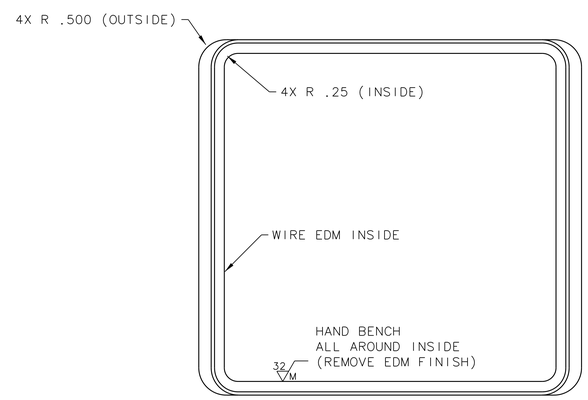

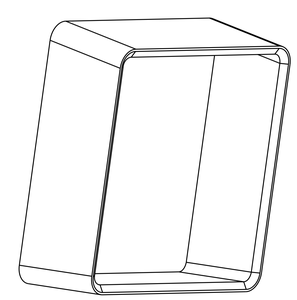

INNER BOX ISO

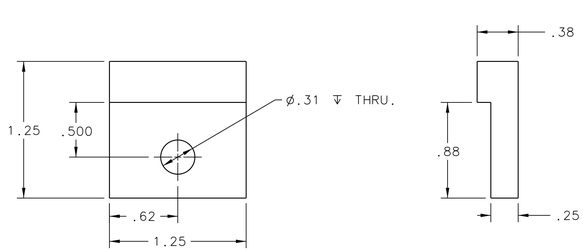

-05 HOLDER BRACKET
SCALE 2:1

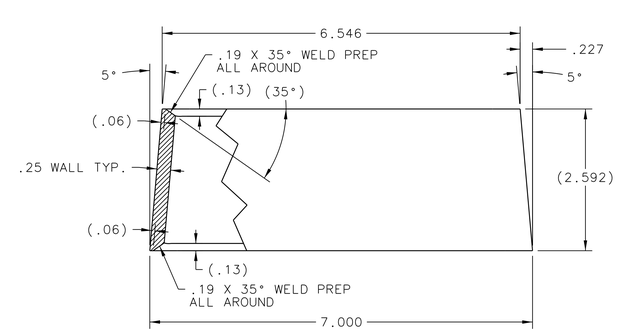

-04 INNER BOX
SCALE 1:1

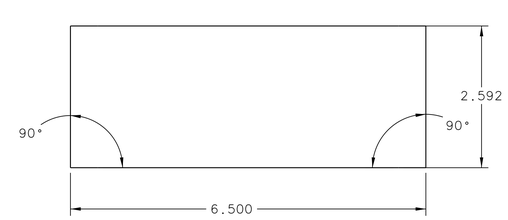

DOCUMENT CONTROL STAMP	SIZE	DWG. NO.	REV.
	E	67505-E-00015	–
	SCALE 1:2	USED ON ASSY NO. -	SHEET 3 OF 3