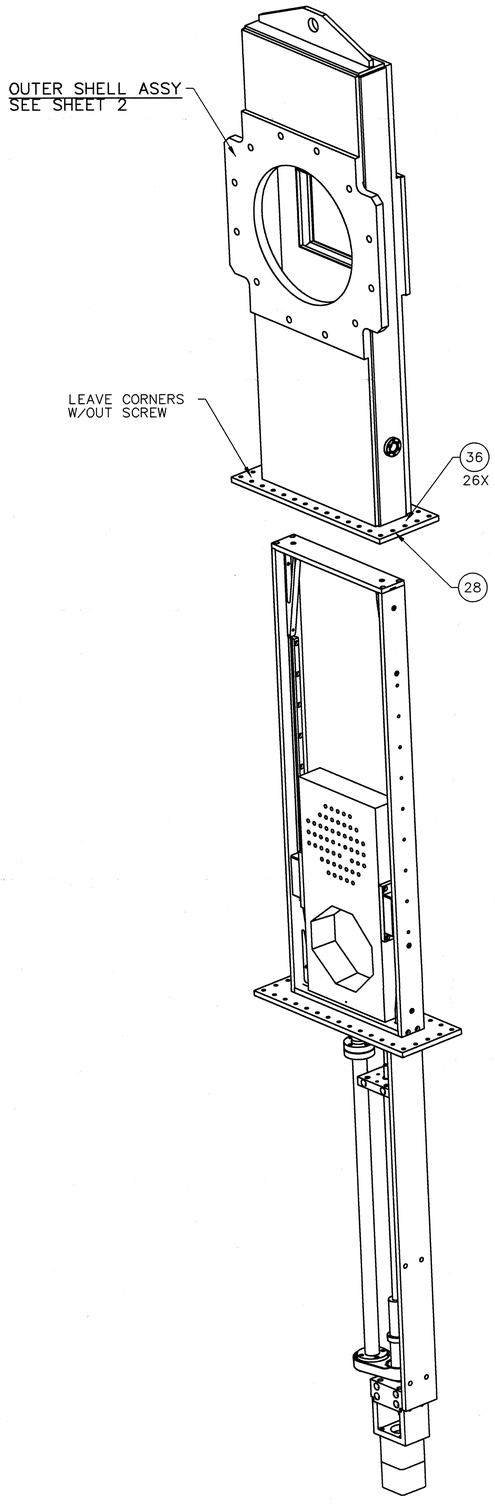

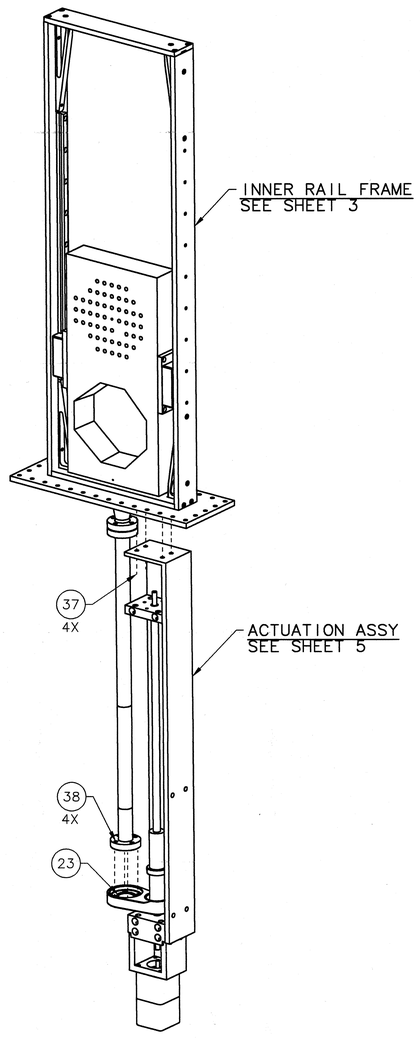

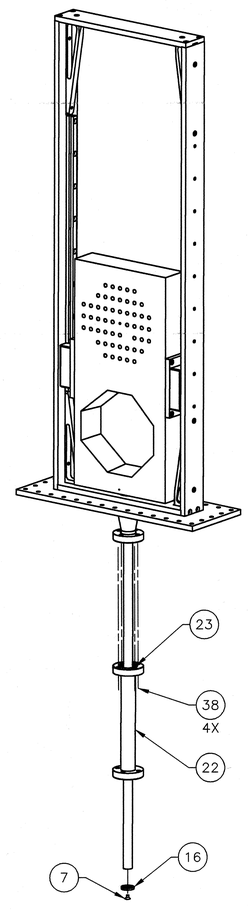

RAIL ASSY STEP 3
SCALE: 1/2

REVISION HISTORY				
ZONE	REV	DESCRIPTION	DATE	APPROVED

NOTE

1. TUNGSTEN COMPOSITE (90% W, 10% CU/NI)
   SUPPLIER: MI-TECH (800) 624-1895
   MATERIAL NAME HD-17

QTY REQD	ITEM NO.	PART OR IDENTIFYING NO.	NOMENCLATURE OR DESCRIPTION	MATERIAL SPECIFICATION	NOTES
1	41	McMASTER CARR 91590A135	RETAINING RING ø1 1/8	ST	-
2	40	-	SCK BT HD SCR #10-32 UNF X 3/8 L	SS	-
6	39	-	SCK HD SCR 5/16-24 UNF X 2 1/4 L	SS	-
8	38	-	HEX HD 1/4-28 UNF X 7/8 L	SS	-
4	37	-	SCK FLT HD SCR 1/4-20 UNC X 3/4 L	SS	-
26	36	-	SCK HD SCR 1/4-20 UNC X 3/4 L	SS	-
4	35	-	SCK HD SCR 1/4-20 UNC X 1 L	SS	-
12	34	-	SCK LOW HD SCR #10-32 UNF X 3/8 L	SS	-
26	33	-	SCK HD SCR M5-08 X 12mm	SS	-
1	32	McMASTER CARR 92383A114	ROLL PIN ø1/16 X 1 L	ST	-
1	31	MDC 130004	CONFLAT ø1 1/2 OD MINI W/NECK TAP HOLES	SS	-
8	30	-	SCK HD SCR #8-32 UNC X 1/2 L	SS	-
8	29	-	SCK FLT HD SCR #8-32 UNC X 5/8 L	SS	-
1	28	-	O-RING (MAKE TO FIT) 1/8 NOMINAL CROSS SECTION	VITON	-
1	27	LINTECH - RS05002052N4W 1F0M02C040E00B20L22.45	LINEAR BALL SCREW ASSY 16.5 IN TRAVEL	SS	-
1	26	MDC 402502	CONICAL REDUCER ø1 1/2 X 1 TUBE	SS	-
1	25	MDC 110005	CONFLAT ø2 1/8 OD - BLANK CLEAR. HOLES	SS	-
1	24	MDC 100007	CONFLAT ø2 1/8 OD X 1 ID CLEAR. HOLES	SS	-
4	23	MDC 191002	COPPER GASKET FOR 2 1/8 CONFLAT	COPPER	-
1	22	STANDARD BELLOW 150-96-40-E+E+-2 1/8 CFF RT/NRT	BELLOW - CF 2 1/8 X 1 ID TAPPED RT/NRT - 24.12 EXT X 7.72 COMP	SS	-
1	21	THOMSON SSU-10	THOMSON SUPER SMART BALL ø5/8 ID BEARING	SS	-
2	20	THOMSON AD-20-A-600L	THOMSON PROFILE RAIL	SS	-
1	19	-	ACTUATOR SUPPORT SEE SHEET 5	AL 6061	-
1	18	-	PLATE 1 X 2 5/8 X 5	SS	-
1	17	-	PLATE 3/4 X 5 1/2 X 15 1/2	SS	-
1	16	-	PLATE ø1 X 1/8	SS	-
1	15	-	PLATE 3/8 X 2 1/8 X 11 1/2	SS	-
1	14	THOMSON LRL-10	THOMSON SHAFT ø5/8 X 25 1/4	SS	-
1	13	-	PLATE 2 X 8 X 16 3/8	SEE NOTE 1	-
2	12	-	PLATE 3/8 X 2 X 4 1/4	SS	-
2	11	-	PLATE 1/2 X 1 3/8 X 6 3/4	SS	-
2	10	-	PLATE 1/2 X 1 3/8 X 7 1/8	SS	-
2	9	-	PLATE 3/8 X 2 1/8 X 34	SS	-
1	8	-	PLATE 3/8 X 5 1/2 X 15 1/2	SS	-
1	7	-	SCK FLT HD SCR #8-32 UNC X 1/4 L	SS	-
1	6	-	PLATE 3/8 X 2 1/2 X 11 1/2	SS	-
1	5	-	PLATE 1/4 X 2 3/8 X 11 7/8	SS	-
1	4	-	PLATE 3/4 X 15 7/8 X 34 11/16	SS	-
1	3	-	PLATE 1.29 X 11 7/8 X 34 5/8	SS	-
1	2	-	PLATE 1/4 X 2 3/8 X 35 5/8	SS	-
1	1	-	PLATE 1/4 X 2 3/8 X 35 5/8	SS	-

PARTS LIST

EACH SHEET OF MULTI-SHEET DRAWINGS SHALL ALWAYS HAVE THE SAME REVISION LEVEL.

DOCUMENT CONTROL STAMP: IOCG

MATERIAL: SEE BOM

FINISH MACHINED SURFACES 125 UNLESS OTHERWISE NOTED
DEBURR & BREAK ALL SHARP EDGES

DO NOT SCALE DRAWING

DIM & TOL PER ASME Y14.5, UNLESS OTHERWISE SPECIFIED
DIMENSIONS ARE IN INCHES
TOLERANCES ARE:
FRACTIONS ± 1/32 — DECIMAL .X ± .1, .XX ± .01, .XXX ± .005 — ANGLES ± .50°

THIRD ANGLE PROJECTION

TRACKING NO. 67500

APPROVALS	DATE
DRAWN P. MEDEIROS	10/20/03
CHECKED	1-13-04
APPROVED	1-13-04
APPROVED	1-12-04

Jefferson Lab
Thomas Jefferson National Accelerator Facility
NEWPORT NEWS, VIRGINIA
UNITED STATES DEPARTMENT OF ENERGY

HALL "C"
HKS EXPERIMENT
HKS SIV SLIT ASSY

SIZE E | DWG. NO. 67500-E-00019 | REV. -

SCALE 1:4 | USED ON ASSY NO. 67500-E-00001 | SHEET 1 OF 6

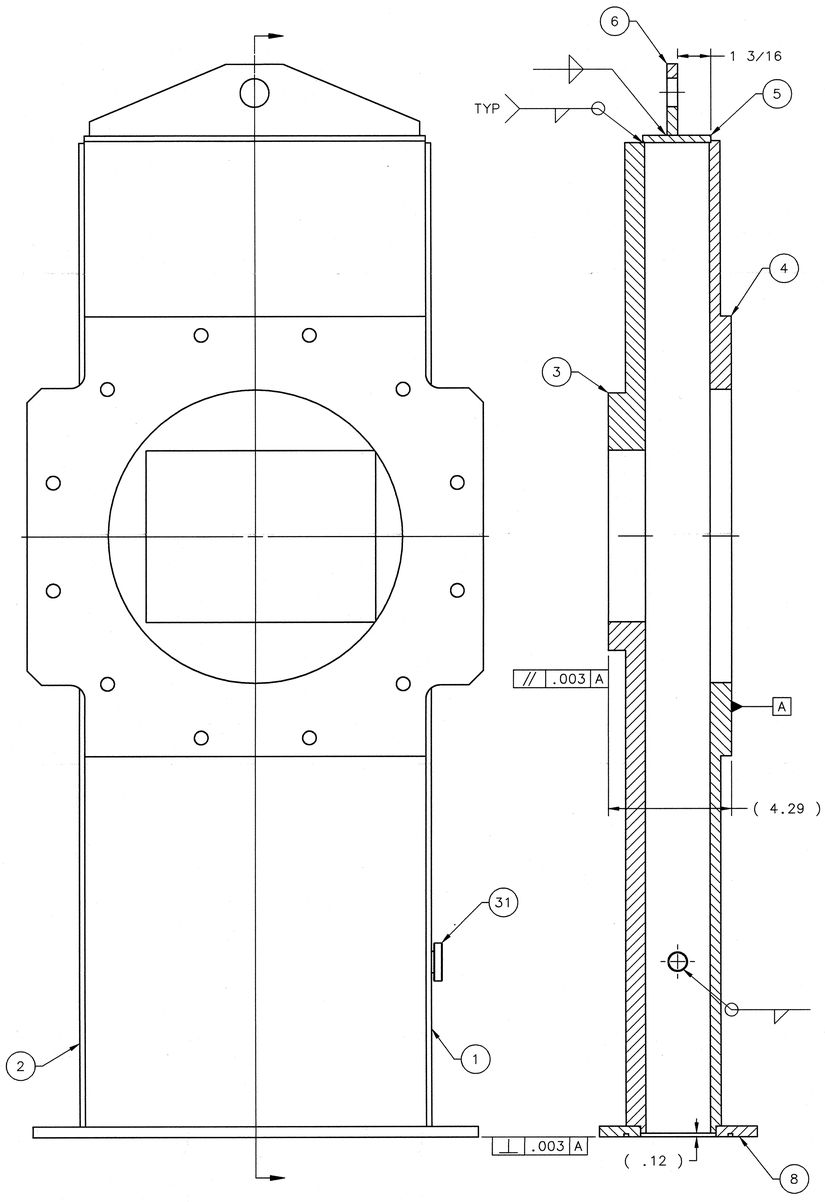

OUTER SHELL ASSY

SCALE: 1/2

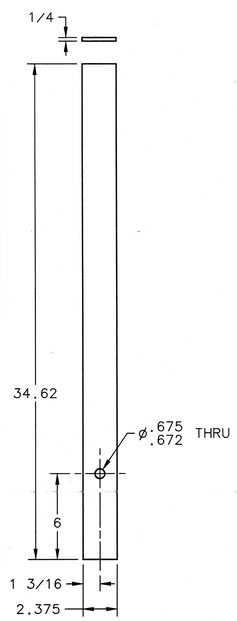

ITEM 1

SCALE: 1/4

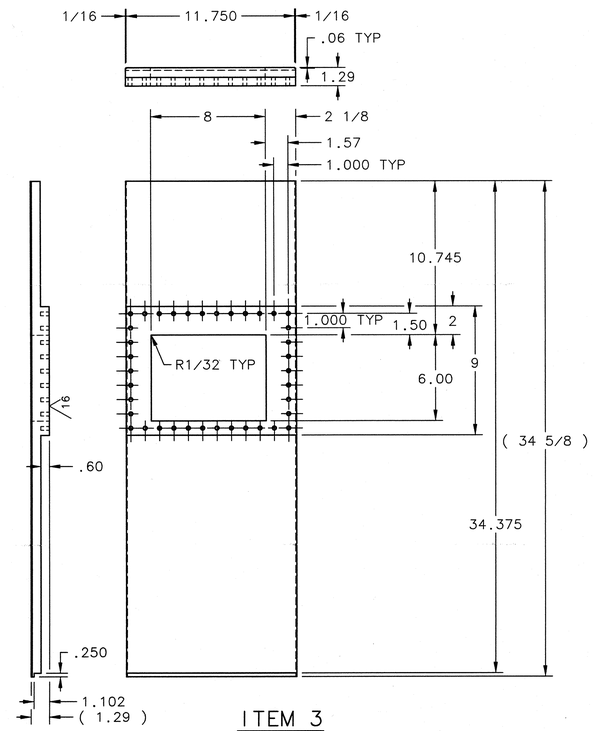

ITEM 3

SCALE: 1/4

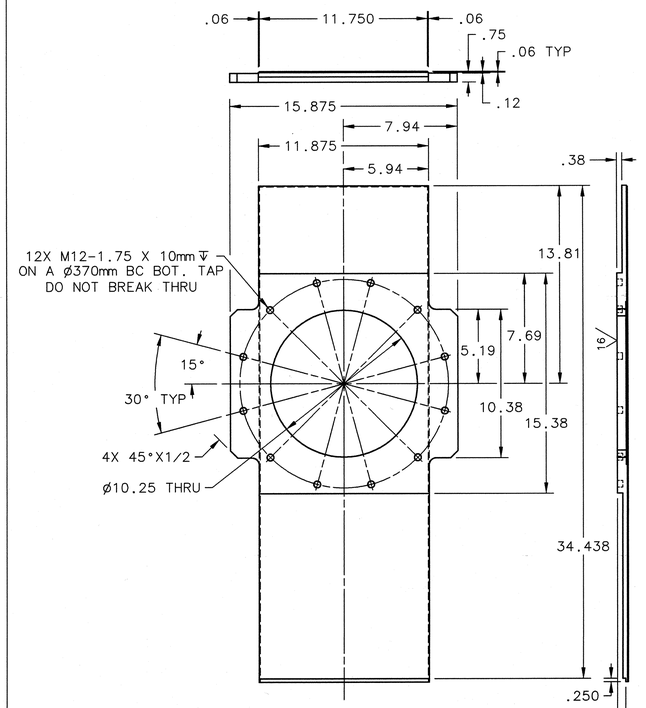

ITEM 4

SCALE: 1/4

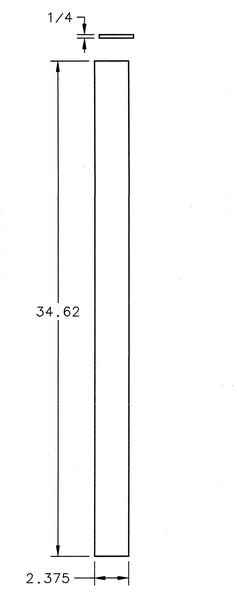

ITEM 2

SCALE: 1/4

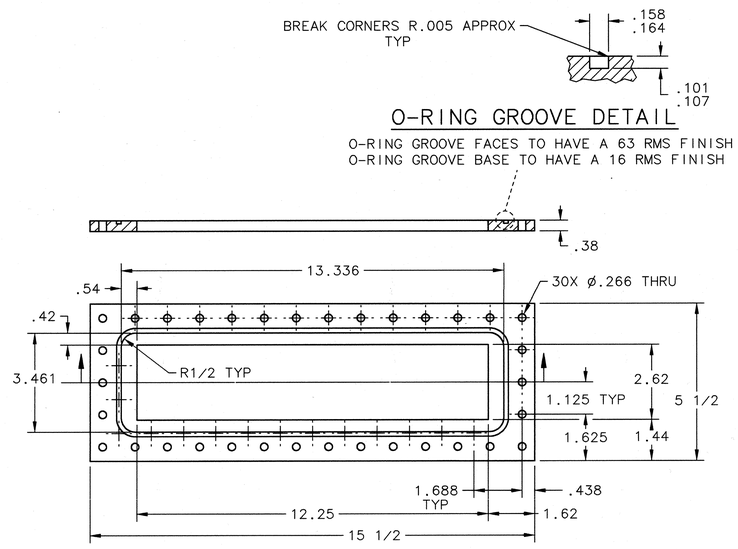

ITEM: 8

SCALE: 1/4

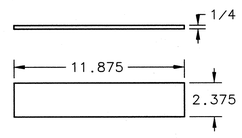

ITEM 5

SCALE: 1/4

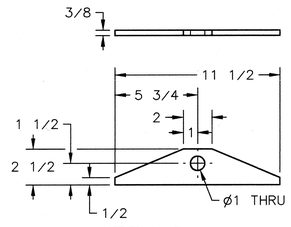

ITEM 6

SCALE: 1/4

SIZE	DWG. NO.	REV.
E	67500-E-00019	–
SCALE 1:4	USED ON ASSY NO. 67500-E-00001	SHEET 2 OF 6

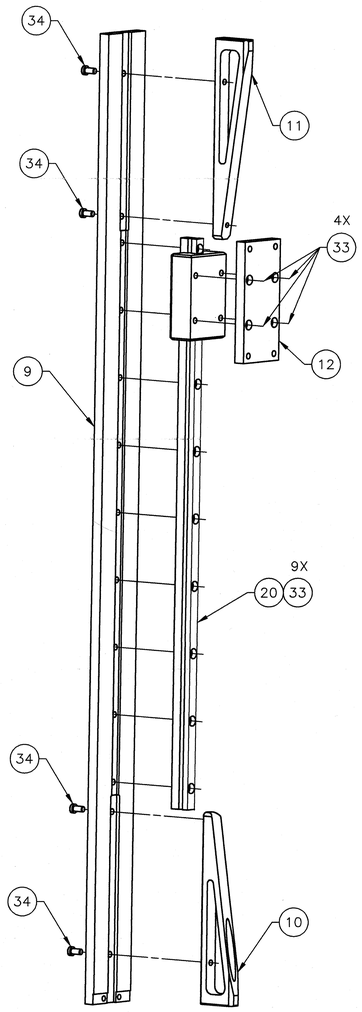

ASSY 1

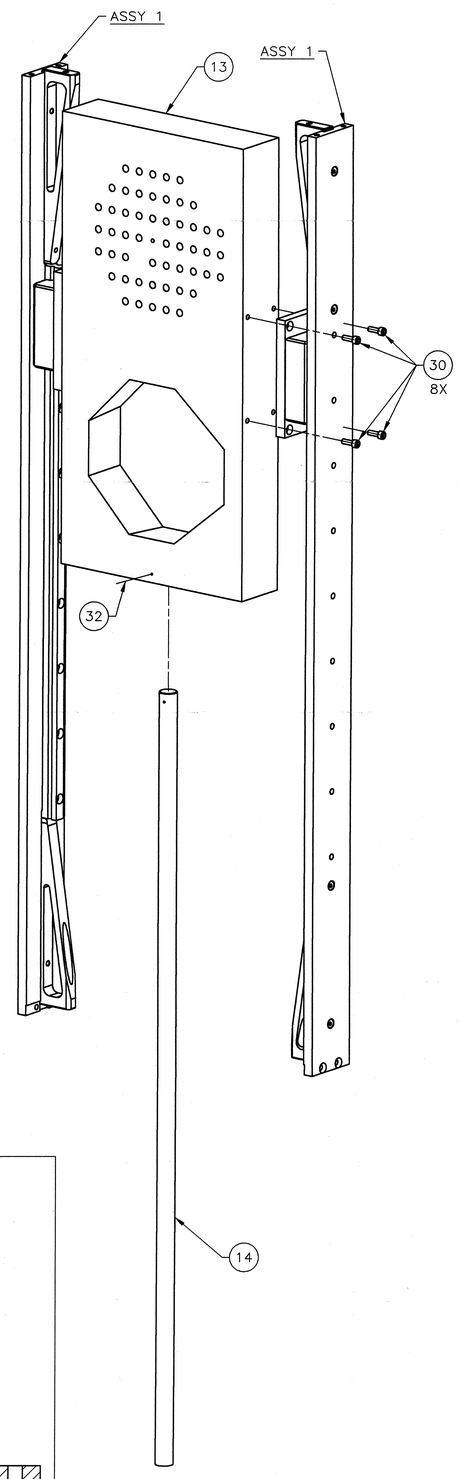

RAIL ASSY STEP 1

SCALE: 1/2

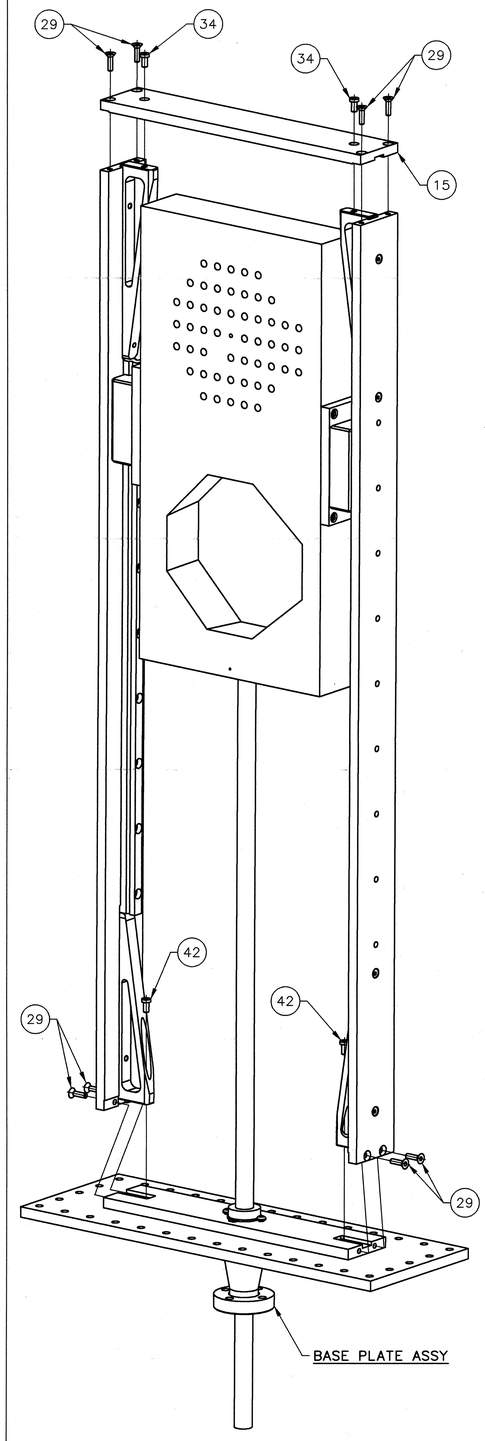

RAIL ASSY STEP 2

SCALE: 1/2

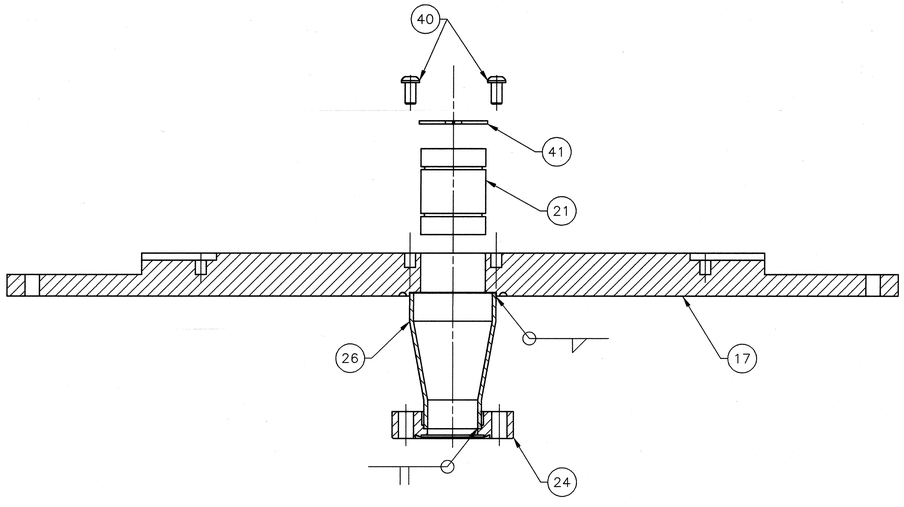

BASE PLATE ASSY

SCALE: 1/1

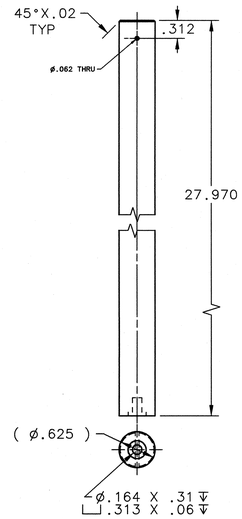

ITEM 14

SCALE: 1/1

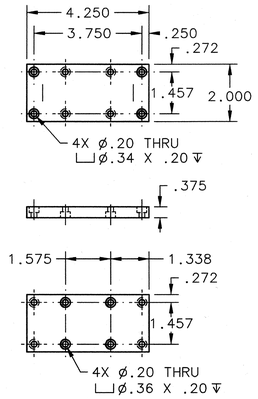

ITEM 12

SCALE: 1/2

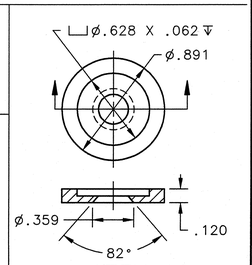

ITEM 16

SCALE:2/1

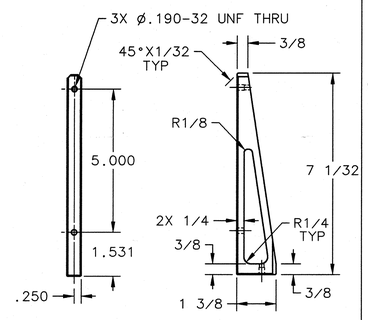

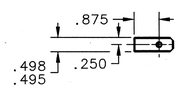

ITEM 10

SCALE: 1/2

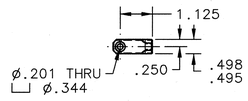

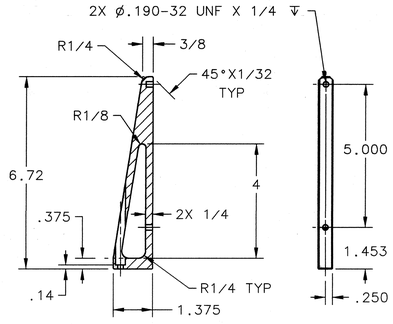

ITEM 11

SCALE: 1/2

SIZE	DWG. NO.	REV.
E	67500-E-00019	–
SCALE 1:4	USED ON ASSY NO. 67500-E-00001	SHEET 3 OF 6